ECONSTOR
Make Your Publications Visible.

A Service of
ZBW
Leibniz-Informationszentrum Wirtschaft
Leibniz Information Centre for Economics

Dasgupta, Indraneel; Kanbur, Ravi

Working Paper

Community and anti-poverty targeting

CREDIT Research Paper, No. 05/01

Provided in Cooperation with:
The University of Nottingham, Centre for Research in Economic Development and International Trade (CREDIT)

Suggested Citation: Dasgupta, Indraneel; Kanbur, Ravi (2005) : Community and anti-poverty targeting, CREDIT Research Paper, No. 05/01, The University of Nottingham, Centre for Research in Economic Development and International Trade (CREDIT), Nottingham

This Version is available at:
https://hdl.handle.net/10419/81785

Standard-Nutzungsbedingungen:

Die Dokumente auf EconStor dürfen zu eigenen wissenschaftlichen Zwecken und zum Privatgebrauch gespeichert und kopiert werden.

Sie dürfen die Dokumente nicht für öffentliche oder kommerzielle Zwecke vervielfältigen, öffentlich ausstellen, öffentlich zugänglich machen, vertreiben oder anderweitig nutzen.

Sofern die Verfasser die Dokumente unter Open-Content-Lizenzen (insbesondere CC-Lizenzen) zur Verfügung gestellt haben sollten, gelten abweichend von diesen Nutzungsbedingungen die in der dort genannten Lizenz gewährten Nutzungsrechte.

Terms of use:

Documents in EconStor may be saved and copied for your personal and scholarly purposes.

You are not to copy documents for public or commercial purposes, to exhibit the documents publicly, to make them publicly available on the internet, or to distribute or otherwise use the documents in public.

If the documents have been made available under an Open Content Licence (especially Creative Commons Licences), you may exercise further usage rights as specified in the indicated licence.

WWW.ECONSTOR.EU

Mitglied der Leibniz-Gemeinschaft

CREDIT Research Paper

No. 05/01

Community and Anti-Poverty Targeting

by

Indraneel Dasgupta and Ravi Kanbur

Centre for Research in Economic Development and International Trade,
University of Nottingham

The Centre for Research in Economic Development and International Trade is based in the School of Economics at the University of Nottingham. It aims to promote research in all aspects of economic development and international trade on both a long term and a short term basis. To this end, CREDIT organises seminar series on Development Economics, acts as a point for collaborative research with other UK and overseas institutions and publishes research papers on topics central to its interests. A list of CREDIT Research Papers is given on the final page of this publication.

Authors who wish to submit a paper for publication should send their manuscript to the Editor of the CREDIT Research Papers, Professor M F Bleaney, at:

Centre for Research in Economic Development and International Trade,
School of Economics,
University of Nottingham,
University Park,
Nottingham, NG7 2RD,
UNITED KINGDOM

Telephone (0115) 951 5620
Fax: (0115) 951 4159

CREDIT Research Papers are distributed free of charge to members of the Centre. Enquiries concerning copies of individual Research Papers or CREDIT membership should be addressed to the CREDIT Secretary at the above address. Papers may also be downloaded from the School of Economics web site at:
www.nottingham.ac.uk/economics/research/credit

CREDIT Research Paper

No. 05/01

Community and Anti-Poverty Targeting

by

Indraneel Dasgupta and Ravi Kanbur

Centre for Research in Economic Development and International Trade, University of Nottingham

The Authors
Indraneel Dasgupta, School of Economics, University of Nottingham, Nottingham NG7 2RD, UK, email: indraneel.dasgupta@nottingham.ac.uk. Ravi Ranbur, Department of Applied Economics and Management and Department of Economics, Cornell University.

Acknowledgements
We thank Chris Barrett, Joan Esteban, Karla Hoff, Daniel Seidmann, S. Subramanian and two referees for helpful comments. We also thank seminar audiences at the Madras Institute of Development Studies, the Conference on Theoretical Perspectives on Identity, Community and Economic Policy, Barcelona, and Bath for useful exchanges. Financial support from The Pew Charitable Trusts is acknowledged.

March 2005

Community and Anti-Poverty Targeting

by

Indraneel Dasgupta and Ravi Kanbur

Abstract

The standard theory of anti-poverty targeting assumes individual incomes cannot be observed, but statistical properties of income distribution in broadly defined groups are known. 'Indicator targeting' rules are then derived for the forms of transfers conditioned on group membership of individuals. In this literature the motivating notion of a "group" is purely statistical, even when it is groups such as localities and ethnicities. We focus instead on groups which are "communities", meaning thereby collections of individuals who have access to community-specific public goods, from which non-members are excluded. Such differential access constitutes a source of inequality among poor individuals belonging to different communities, which is not captured by monetary earnings. We show that this formulation of what constitutes a group changes many of the basic results of the indicator targeting literature. Optimal targeting for poverty alleviation leads to seemingly paradoxical rules, such as targeting transfers to the community that is richer. Total wealth of non-poor members of a community and its distribution both become relevant for specifying optimal indicator targeting rules. In addition, a poverty measure that is sensitive to the community identities of poor individuals, yet defined on nominal incomes, may be incompatible with some of the basic axioms in the standard literature on poverty measurement.

Keywords: Community, Inequality, Anti-poverty Targeting, Local Public Good.

JEL Classification Number: D31, D63, D74, Z13.

Outline

1. Introduction
2. The Standard of Theory of Targeting
3. Group as Community
4. Measuring Poverty with Community Effects
5. Income Based Targeting with Community Effects
6. Group Based Targeting with Community Effects
7. Generalizations
8. Conclusion

1. INTRODUCTION

The theory of targeting is now well developed. Starting with Akerlof (1978), the use of income and non-income information to target transfers in anti-poverty programs has led to considerable work along theoretical, empirical and policy lines. At the heart of this literature is the following question. How should one condition transfers to individuals on their exogenously given non-income characteristics (also called 'indicators'), so as to increase the poverty alleviation efficiency of a given anti-poverty budget, the objective being to minimize a given measure of poverty? The non-income information can be used to supplement income information. Typically, statistical information on the joint distribution of income and other observable characteristics is assumed available, but not individual level income information.[1]

The non-income information available is typically whether an individual belongs to a well-defined "group". Obvious examples are ethnic/religious/gender groupings, and categorizations by age or spatial location. Whichever grouping is chosen for focus, the targeting literature has not shown much interest in what follows from the notion of group membership in terms of individual welfare. The grouping is simply another partitioning of the population, leading to a statistical income distribution pattern that can be used to better target anti-poverty transfers conditioned on group membership. The question asked in the literature is how precisely to use this information to design targeting rules.

However, in socio-economic reality, certain (though not all) types of group membership can be thought of as providing access to group specific local public goods, from which members of other groups are excluded. In such cases, group affiliation carries implications for individual well-being and poverty. Such a club good perspective on groups is introduced in Dasgupta and Kanbur (2001). We call groups
characterized by access to group-specific public goods as 'communities'.

If community affiliation allows poor people access to public goods from which non-members are excluded, then membership status becomes a source of inequality among the poor. Two

poor individuals may have the *same money income*,[2] yet one, by virtue of belonging to the community that is better endowed with the public good, may be better off than the other. For example, one may live in a community with access to a village well, or a public park, but not the other. The former may also live in a region that organizes its own security and maintains its roads, streetlights and schools better. Or, she may belong to an ethnic/religious community whose members take greater precautions against communicable diseases. Clearly, this factor should have a bearing on how optimal anti-poverty policies are targeted.

Group-specific public goods may be valuable to individual group members for both *instrumental* and *intrinsic* reasons. Local public good effects can complement other productive inputs that an individual may possess. Gains from community membership would then be reflected in higher monetary earnings (Dasgupta and Kanbur (2002)).[3] Standard poverty measures, and standard rules of anti-poverty targeting, will both take into account such instrumental benefits. However, local public goods may be intrinsically important for the well-being of community members as well. Access to clean drinking water, or membership of a group with behavioral norms that provide greater protection against communicable diseases, may lead to better health status, which, while conceivably income augmenting, is also intrinsically valuable. Better roads and streetlights facilitate both leisure travel and social intercourse. Greater security guarantees for one's person and property are also independently conducive to greater social engagement and a low-stress environment. Access to recreational, cultural and religious facilities such as parks, museums, playgrounds, theatres, concert halls, sites of collective worship etc. is likewise intrinsically important to the well-being of individuals. These differential gains from community membership which, in essence, take the form of intrinsic benefits from *in-kind*, rather than cash, payments of goods and facilities, are however not captured by individual-level information on monetary earnings.

---

1 Kanbur (1987), Besley and Kanbur (1993), Kanbur, Keen and Tuomala (1994), Bourguignon and Fields (1990), and Ravallion (1993, 1999) are examples of analyses in this vein.

2 Sections of the poor in developing countries, such as subsistence farmers, forest dwellers and fishermen often use significant portions of their marketable products for self-consumption rather than market sale. Poor individuals may also own their homestead land. Throughout this paper, we shall use the phrase 'money income' or 'nominal income' in a broad sense, as including the market value of such self-consumption, in addition to monetary earnings from market sales and state transfers. While imputing money income in this broad sense can sometimes be difficult in practice, these difficulties are conceptually quite different from those involved in imputing monetary equivalents to welfare gains from access to group-specific public goods. Our focus will be on the latter class of difficulties.

Consequently, the standard approach to poverty measurement and anti-poverty targeting ignores them.

Why may inter-group disparity in access to intrinsically valuable public goods persist? There are various reasons why individuals may find migration to communities better endowed with such public goods prohibitively expensive. Geographic relocation over large distances often involves large material and psychic costs, as does the acquiring of the ability to appreciate literary and cultural output within ethno-linguistic traditions one has not grown up within. Religious beliefs often preclude participation in rituals and practices of another religious community. Furthermore, social interaction with individuals from other ethnic, racial or religious backgrounds often entails considerable friction and psychological stress – 'the discomfort of strangers', or even that of historic enemies. Thus, members of a particular ethnic or religious group may find their utility level for a given, non-denominational, public good, say a village well, diminished, if, in accessing water from that well, they are also forced into social contact with members of a different group.[4] These psychic costs can arise independently of standard congestion costs discussed in the theory of club goods. For example, in India, notions of ritual pollution often implied that public goods such as roads, school buildings, temples or water sources would become unfit for use by upper castes, if also utilized by certain lower castes or other religious groups. Individuals may consequently seek to prevent members of other ethnic, religious or caste groups from sharing public goods with them, and/or refrain from accessing public goods used by other groups, even if there are 'economic', i.e. evidently material, reasons against doing so.[5] This in turn often generates persistent residential segregation along racial, linguistic, religious or caste lines. Thus, significant differences in access to intrinsically valuable public goods may persist across large

3 Benabou (1994), Borjas (1995) and Durlauf (1994) also discuss externalities in ethnic groups and neighborhoods.

4 Alesina et al. (1999) and Alesina and La Ferrara (2000) provide related discussions of how individuals may be less willing to contribute to common access public goods if they live in ethnically diverse communities.

5 The city of Mostar in Bosnia-Herzegovina provides a telling example of such 'irrational rationality'. "Costly and redundant as it may seem, this city has two sets of nearly everything: hospitals, universities, primary schools, public transportation, even waste disposal services. "Everything is duplicated because there are two peoples," explained Zoran Knezovic, the proud manager of the Zrinjski soccer team, made up almost entirely of ethnic Croats. Mostar also has another soccer team, Velez, which is mostly Muslim. That is how it has been for nearly 10 years, since the two communities signed a truce freezing a bitter and violent conflict that was part of the Balkan wars of the 1990s" (Wood (2004)). On the rationale behind group exclusionary practices, see also Bowles and Gintis (2000).

regional divides, as well as across such identity divides, especially when associated with residential segregation.

The basic methodology we suggest is the following. The presence of group-specific public goods implies that, in making welfare comparisons, one has to develop a notion of *real* (or *equivalent*) income, along the lines of the standard notion of equivalent variation, that incorporates the monetary equivalent of non-monetary gains from community membership. Optimal rules for targeting of anti-poverty programs, implemented through the instrument of monetary transfers, then have to be derived by taking into account the community-specific, possibly differential, impact of monetary transfers on such real income.

In thinking about intrinsic benefits from group-specific public goods, two relationships suggest themselves.

First, as individuals acquire more money, they would also wish more of these benefits. Given prices, richer individuals would like to spend part of their additional resources on better health, security, transport, cultural, religious and recreational outcomes. Often, though not always, due to large fixed costs of exclusive consumption and non-rivalry in use, the individually rational way of attaining these outcomes would be through local public goods. The very rich might set up private parks, hire bodyguards, purchase helicopters, or arrange private concerts, but the moderately better off would find such exclusive consumption prohibitively expensive. They would instead contribute more towards improvement of the local park, community policing, maintenance of local roads and community centers etc.; items which benefit poor community members as well. Even the very rich, due to reasons of non-rivalry in consumption, or altruism, may allow others (at least partial) use of their facilities. Thus, it seems reasonable to think of group-specific public goods as normal goods for individual members.[6]

Second, benefits from private expenditure are often heightened, or at least not reduced, by better public facilities. Cleaner water, by improving digestion, allows the body to better

6 This may be quite different for instrumental, i.e., income-augmenting, gains from local public goods. Better roads, for example, by allowing agricultural workers to migrate more easily, may increase labor costs of landowners.

absorb nutrients from food. Better roads do not reduce the enjoyment from a unit expenditure on leisure/social travel. Better community libraries, local museums or playgrounds do not reduce the benefits from private expenditure on education or sports equipment.[7] Thus, in many, perhaps most, cases, it is plausible to think of private expenditure and community-specific public facilities as at least weakly complementary for individuals.

We examine the implications of group-specific access to public goods which are normal and weakly complimentary to private expenditure. Taking the notion of a community, in our sense, seriously has major consequences for the results of the targeting literature. Many standard results on indicator targeting, when the indicator categorizes individuals into communities in our sense, get modified or overturned. Section 2 sets out the major thrusts of this literature to establish the benchmark. Section 3 presents our model of community. Sections 4-6 then revisit the basic issues in the targeting literature. It follows from our framework that richer communities should have lower nominal poverty lines. Using the Foster-Greer-Thorbecke (1984) measure of poverty, defined over real, rather than nominal, incomes, we show the following. Paradoxically, efficient targeting of anti-poverty programs may dictate favoring of poor members of the richer community. This happens because, due to the complementarity noted earlier, monetary transfers are more effective in improving welfare in the richer community. Total income of *non-poor* members of a community, and its distribution, both matter for determining optimal anti-poverty targeting rules, since they determine the magnitude of the public goods that community members have access to. A poverty measure defined over nominal incomes, yet sensitive to the community identities of poor individuals, may be incompatible with some of the basic axioms developed in the literature on standard measures of poverty. Section 7 addresses some generalizations. Section 8 concludes.

7 As a child, the 19th century Indian social reformer Ishwarchandra Vidyasagar often studied under streetlights because his family could not afford fuel for domestic lamps. Arguably, more powerful streetlights in 19th century Calcutta would not have reduced Vidyasagar's benefits from additional income.

2. THE STANDARD THEORY OF TARGETING

2.1. Measuring Poverty

Let $I_1 \leq I_2 \leq ... \leq I_q < z < I_{q+1} \leq ... \leq I_n$ be the distribution of income I across n individuals, where z is the exogenously given poverty line separating the poor from the non-poor; z cuts off q individuals below the poverty line. In applied work, I is usually a monetary valuation of total resources of the household, including the imputed market value of self-consumption of marketable products and endowments, information about which is collected from household surveys. The poverty line is a normative concept, reflecting social norms on what it means to be "poor". A common starting point is minimum intake of calories, supplemented with requirements for non-food expenditures such as clothing and housing. Clearly, the latter items, and to some extent food related minimum requirements, are dependent on social norms and can vary from society to society. Conceptually, we can think of a basic bundle of commodities as the minimum requirement, or as derived from the minimum requirement of more basic but more intangible considerations (e.g. the ability to appear in public without shame). This bundle is "priced out" and a level of income is derived as the poverty line. Once all price variations are taken into account, if I is also corrected for relevant variations, the poverty line should be the same for all members of a society.

However, as the commodity bundle changes, or as the cost of achieving a given bundle changes, the poverty line may change. If a poverty line moves with the mean of the income distribution, it is usually referred to as a *relative* poverty line. Otherwise, it is called an *absolute* poverty line. Whether the poverty line should be relative or absolute is the subject of much debate (Atkinson and Bourguignon (2000), Ravallion and Lokshin (2003)). But there seems to be a consensus that, as societies develop, their production structures change, as do their norms, hence, richer societies should have higher poverty lines.

Given a poverty line and given a distribution of income, the next question is how to aggregate the information into an index of poverty. In both applied and theoretical work, a central role is played by the FGT index, first developed in Foster, Greer and Thorbecke (1984):

$$P_a = \frac{1}{n}\sum_{i\in\Pi}\left(1-\frac{I_i}{z}\right)^a \text{,where} \Pi = \{j \mid j \in \{1,\ldots,n\},\ \ and\ \ I_j < z\}, \quad (1)$$

where ? is the set of poor individuals and a is an index of poverty aversion which emphasizes concern for the poorest of the poor. When a = 0, the index collapses to the fraction of people below the poverty line, the commonly used "head count ratio". When a = 1, it is a sum of the gaps of each poor person's income from the poverty line, suitably normalized. This is often termed the "income gap" measure. As a increases beyond 1, increasing weight is put on the larger gaps. In the literature, a benchmark is provided by a = 2. As a increases the focus is increasingly on the poorest of the poor. In the limit, as a tends to infinity, we have the Rawlsian measure: the only thing that matters is the poverty of the very poorest person.

2.2. Income Based Targeting

Suppose we have a limited budget for income transfers. How can it be allocated to have the biggest impact on poverty? This is the canonical problem posed in the targeting literature. The answer depends on the information structure of the problem, and on the behavioral responses to the transfers. Let us start with the most comprehensive information that can be available - every individual's income can be costlessly identified. Let us also assume no behavioral responses to the transfers. Then it is clear that the transfer rule for the marginal dollar depends on the value of a (Bourguignon and Fields (1990)).

When a = 0, the focus is on the margin at the poverty line. If the transfer is so small that not even the person closest to the poverty line can be lifted over that line, then it does not matter who it is given to. As the amount available grows to a level that can shift this person over the poverty line, then the transfer should be given to her, and then to the next person, and so on. Thus the transfers should go first to those closest to the poverty line. When a = 1, it does not matter who the marginal transfer goes to, since the reduction of anyone's poverty gap counts the same in the overall index. However, when a becomes bigger than 1 the rule changes to the lexicographic maximin condition. The transfer should be made to the poorest person; as the resources increase, this transfer should continue until the poorest person has the same income as the next poorest person; as resources increase further, the transfer should continue

equally to these two people until they have the same income as the next poorest person; and so on.

2.3. Group Based Targeting

Suppose now that individual income cannot be observed, but individual membership of a group can be. More formally, consider a society of n individuals, represented by the set S, which can be partitioned into two non-empty subsets A and B. Thus, society consists of two mutually exclusive groups, indexed A and B (the generalization to more than two is straightforward). Let A, B, and S contain, respectively, n_A, n_B and n members. The transfer can now be conditioned on group membership. All members of a group have to be treated alike, since there is no basis on which to do otherwise, but members of different groups can be treated differently. Let the resources available at the margin be denoted by c. We suppose these are small enough so that nobody is pushed over the poverty line. We can begin by posing the following question - if the transfer was to be given to only one group, which should it be?

The overall poverty index can be written as:

$$P_a = \frac{1}{n}\left[\sum_{i\in\Pi_A}\left(1-\frac{I_i}{z}\right)^a + \sum_{i\in\Pi_B}\left(1-\frac{I_i}{z}\right)^a\right], \qquad (2)$$

where $?_A$ and $?_B$ are the sets of poor individuals in the two groups. For each of the cases where the transfer is made to A or B individuals, the poverty index is given respectively by the following:

$$P_a = \frac{1}{n}\left[\sum_{i\in\Pi_A}\left(1-\frac{I_i+\frac{c}{n_A}}{z}\right)^a + \sum_{i\in\Pi_B}\left(1-\frac{I_i}{z}\right)^a\right], \qquad (3)$$

$$P_a = \frac{1}{n}\left[\sum_{i\in\Pi_A}\left(1-\frac{I_i}{z}\right)^a + \sum_{i\in\Pi_B}\left(1-\frac{I_i+\frac{c}{n_B}}{z}\right)^a\right]. \qquad (4)$$

The impact on poverty of a marginal transfer to either group is thus given by the derivatives of (3) and (4), evaluated at $c = 0$. For any group $k \in \{A, B\}$, the corresponding expression is:

$$\frac{dP_a}{dc}\Big|_{c=0} = \frac{-a}{nz}\left\{\frac{1}{n_k}\sum_{i\in\Pi_k}\left(1-\frac{I_i}{z}\right)^{a-1}\right\} = \frac{-a}{nz}P_{(a-1),k}\,. \quad (5)$$

Equation (5) captures a result first derived in Kanbur (1987). If the objective is to minimize P_a then the group with higher P_{a-1} (which need not have higher P_a) should be targeted at the margin. Thus if the normatively chosen value of a is 1, the group with the higher head count ratio should be targeted. If a is 2, then the group with the higher income gap should be targeted. The basic intuition that the poorer group should be targeted is borne out, but with a subtle modification. If the objective is P_a, the targeting indicator is P_{a-1}. Condition (5) can also be used to derive rules for the optimal allocation of a transfer budget - the first order condition obviously being that P_{a-1} should be equalized across the groups. It can also be used for targeting in a variety of contexts, e.g. food subsidies (Besley and Kanbur (1988)), land holding based targeting (Ravallion and Chao (1989)) or geographical targeting (Ravallion (1993)).

3. GROUP AS COMMUNITY

We develop now the idea that a group is more than simply an index distinguishing one set of individuals from another. Following Dasgupta and Kanbur (2001), we visualize a group as a *community*, defined by access to a group-specific public good, from which non-members are excluded.

Individuals derive utility from private consumption and from a community specific public good. For any individual $i \in S$, preferences are given by a strictly quasi-concave and twice continuously differentiable utility function $u(x_i, y)$, where x_i and y respectively denote the amounts of the private and the public good consumed. When i belongs to community $k \in \{A, B\}$, $y = y^k$. We thus assume that all individuals in society have identical

preferences; however, members of community A do not benefit from community B's public good, and vice versa. Agent i has own money (or nominal) income $I_i \in \Re_{++}$.

We follow the standard literature on voluntary provision of public goods (Bergstrom, Blume and Varian (1986)) in modeling the supply of the public good. It is voluntary provision that distinguishes community from state, whereas non-rival consumption distinguishes community from market (Dasgupta and Kanbur (2001)). The total supply of the public good is assumed to be simply the sum of the individual contributions in that community. Thus in any community k each individual solves the problem:

$$\underset{x_i, y}{Max} \quad u\left(x_i, y^k\right) \text{s.t.} \qquad (6)$$

$$x_i + py^k = I_i + py_{-i}^k,$$

$$y^k \geq y_{-i}^k;$$

where y_{-i}^k is the sum of contributions of community members other than i, and p is the unit cost of the public good. The solution to (6), subject to the budget constraint alone, yields the unrestricted demand functions: $[y = G\left(I_i + y_{-i}^k, p\right)]$, and $[x_i = H\left(I_i + y_{-i}^k, p\right)]$. We assume all goods are normal:

A1. For all $p, I_i \in \Re_{++}$, both G and H are differentiable and increasing in I_i.

By A1, there must exist a unique Cournot-Nash equilibrium in the voluntary contributions game.[8] We now simplify the notation by assuming p to be unity. Define $[g\left(I_i + y_{-i}^k\right) \equiv G\left(I_i + y_{-i}^k, 1\right)]$, $[h\left(I_i + y_{-i}^k\right) \equiv H\left(I_i + y_{-i}^k, 1\right)]$. Agent i, of community k, is *non-contributory* in a Nash equilibrium if and only if, in that Nash equilibrium, $[y_{-i} > g\left(I_i + y_{-i}^k\right)]$, and *contributory* otherwise. Let:

$$\underline{I}\left(y_{-i}^k\right) \equiv g^{-1}\left(y_{-i}^k\right) - y_{-i}^k.$$

A1 implies that i is non-contributory if, and only if, $I_i < \underline{I}\left(y_{-i}^k\right)$.

8 See Bergstrom, Blume and Varian (1986).

Let C^k, N^k be the sets of all contributors and non-contributors, respectively, in the Nash equilibrium in community k, with cardinality n_{Ck}, n_{Nk}. We assume both sets are non-empty. Evidently, given A1, all contributors must be richer than any non-contributor. In a Nash equilibrium, the utility of each individual will depend critically on whether or not that individual is contributory.

Starting from an initial income distribution in community k, with its attendant Nash equilibrium level of the public good, consider a redistribution only among contributors such that their incomes are equalized, every such agent receiving $\bar{I}_{Ck} = n_{Ck}^{-1} \sum_{i \in C^k} I_i$. Let the corresponding equilibrium amount of the public good be given by $\bar{y}(\bar{I}_{Ck}, n_{Ck})$. Evidently, every contributor must provide $n_{Ck}^{-1} \bar{y}(\bar{I}_{Ck}, n_{Ck})$ in this equilibrium. The neutrality property of Cournot games with public goods (Bergstrom et al. (1986)) implies that the original equilibrium amount of the public good must also be $\bar{y}$, i.e., $\left[y^k = \bar{y}(\bar{I}_{Ck}, n_{Ck})\right]$. Private consumption among contributors must be identical in the two equilibria as well.

Define the *real income* of agent i in a Nash equilibrium, where she consumes (x_i, y), as: $[r(x_i, y) \equiv V^{-1}(u(x_i, y))]$; V being the indirect utility function. Thus, the real income in an equilibrium is the minimum expenditure that the agent would require to generate the same utility, as that provided by her actual consumption in that equilibrium, if she were, somehow, to lose access to public goods contributions by other agents. The utility of non- contributors and contributors is given respectively by:

$$u = u(I_i, y^k). \qquad (7)$$

$$u = V\left(\bar{I}_{Ck} + \bar{y}(\bar{I}_{Ck}, n_{Ck})\left(\frac{n_{Ck} - 1}{n_{Ck}}\right)\right), \qquad (8)$$

We can specify the "real income" of a non-contributory agent in community k as:

$$r_i = r(I_i, y^k) \equiv I_i + [y^k - f(I_i, y^k)], \qquad (9)$$

such that: $f \in (0, y^k)$. Thus, real incomes of non-contributors vary with their nominal incomes, but also depend on the level of the community specific public good, and thereby, on

the nominal incomes of the contributory (richer) members of their community. From (8), real incomes of contributors are identical:

$$r_i = r^*\left(\bar{I}_{Ck}, n_{Ck}\right) \equiv \bar{I}_{Ck} + \bar{y}\left(\bar{I}_{Ck}, n_{Ck}\right)\left(\frac{n_{Ck} - 1}{n_{Ck}}\right). \qquad (10)$$

Since preferences are identical, an agent is better off than another if and only if she has more real income.

We now introduce two more restrictions on preferences.

A2. There exists a positive monotonic transformation of $u(x_i, y)$, $W(x_i, y)$, such that: (a) $W_{x_i y} \geq 0$, and (b) the indirect utility function corresponding to W is strictly concave in income.

A3. There exists a positive monotonic transformation of $u(x_i, y)$, $Z(x_i, y)$, such that: (a) $Z_{x_i x_i}, Z_{yy} < 0$, and (b) the indirect utility function corresponding to Z is convex in income.

A2(a) is the weak complementarity condition discussed in section 1. Standard functional forms used in theoretical and applied work such as the Cobb-Douglas, Stone-Geary and CES all satisfy A1-A3.

Lemma 3.1. (Dasgupta and Kanbur (2001)) *Given A1-A3, if* $I_i < \underline{I}(y_{-i})$, *then:* $r_{\bar{y}I_i} > 0$, *and* $r_{I_i I_i}, r_{\overline{yy}} < 0$.[9]

One particular functional form for the utility function that will be useful in the detailed analysis is:

$$u = \ln x_i + \ln y. \qquad (11)$$

9 A3 is slightly different from the corresponding assumption in Dasgupta and Kanbur (2001), generating negativity for r_{II}, $r_{\overline{yy}}$, rather than the non-positivity there. The proof is identical. A2-A3 are sufficient but not necessary.

Then $\underline{I}(y_{-i}) = y_{-i}$. Suppose $I_i < y_{-i}$, which implies i is non-contributory. It is easy to check that:

$$r_i = 2\sqrt{I_i y_{-i}} = 2\sqrt{I_i \bar{I}_{Ck}\left(\frac{n_{Ck}}{n_{Ck}+1}\right)}. \qquad (12)$$

The real income of contributors is $2n_{Ck}\bar{I}_{Ck}(n_{Ck}+1)^{-1}$.

4. MEASURING POVERTY WITH COMMUNITY EFFECTS

In the model developed above, nominal income is no longer an appropriate measure of well-being, at least not by itself. Since there is now a community-specific public good that provides utility, this has to be taken into account in the measurement of well-being and indeed of poverty.[10] Real income is an obvious basis for such measurement. In principle, given the distribution of r, we can compute poverty in exactly the same way as was done for I in Section 2.1, but with a poverty line define on r, z_r.

Once again, let the two communities be indexed by A and B. Let the income levels in each community be I_j, $j \in \{1,2,...,J\}$. Let the number of individuals at income level j in community $k \in \{A,B\}$ be n_{kj}. Let the critical level on income that demarcates contributors from non-contributors in the Nash equilibrium in k be $\hat{I}_k$, and let the level of the public good be y^k. Define the set of contributory income classes in community k as $M_k = \{j \in \{1,...,J\} \mid I_j \geq \hat{I}_k\}$, and let the set of contributory individuals in k be defined, as before, as $C_k = \{i \in k \mid I_i \geq \hat{I}_k\}$. Then $\bar{I}_{Ck} = n_{Ck}^{-1}\sum_{j \in M_k} n_{kj} I_j$, where $n_{Ck} = \sum_{j \in M_k} n_{kj}$.

The real income at each level of nominal income in community k is given (using (9) and (10)) by:

10 More formally, what is now implausible is the standard 'monotonic welfare' axiom, which constitutes the welfare basis of most standard poverty measures: given any (nominal) income vector I and any pair of individuals j and k, if $I_j > I_k$, then $W_j > W_k$, where W_j, W_k refer to welfare levels of the corresponding individuals. See Sen (1976).

$$r^k = \begin{cases} r^*\left(\bar{I}_{Ck}, n_{Ck}\right) & if\ I_j \geq \hat{I}_k \\ r\left(I_j, \bar{y}\left(\bar{I}_{Ck}, n_{Ck}\right)\right) & otherwise \end{cases}; \qquad (13)$$

To fix ideas, we think of *A* as the richer community, in that its *contributors* have either higher average or total income and hence, its public good level is higher. By A1, contributors in *A* must then have higher private consumption as well. Thus contributors in *A* are better off than those in *B*. But non-contributors in *A* are also better off than non-contributors in *B* with the same nominal income, because those in *A* have access to a higher level of public good supply by virtue of belonging to the community, even though they are not contributing to that supply. It is the good fortune of those in *A* that they live in a community where the contributors to the public good have greater wealth than the corresponding contributors in *B*.

Figure 1 plots the relationship between nominal and real income for the two communities. *OP'Q'* shows the relationship for individuals belonging to *B*, while *OPQ* shows that for members of *A*. The schedules will coincide with the origin at 0 nominal income if preferences are Cobb-Douglas (note (12)), but need not do so in general. The key elements are the following. First, for reasons already discussed, at every positive nominal income, the schedule for *A* must lie above that for *B*. Second, the schedule for *A* must be steeper than that for *B* for every nominal income at which the agent in *A* is non-contributory. The second, which follows from Lemma 3.1, is essentially generated by our assumption of weak complementarity between private and public goods, discussed in section 1 and embedded through A2(a).

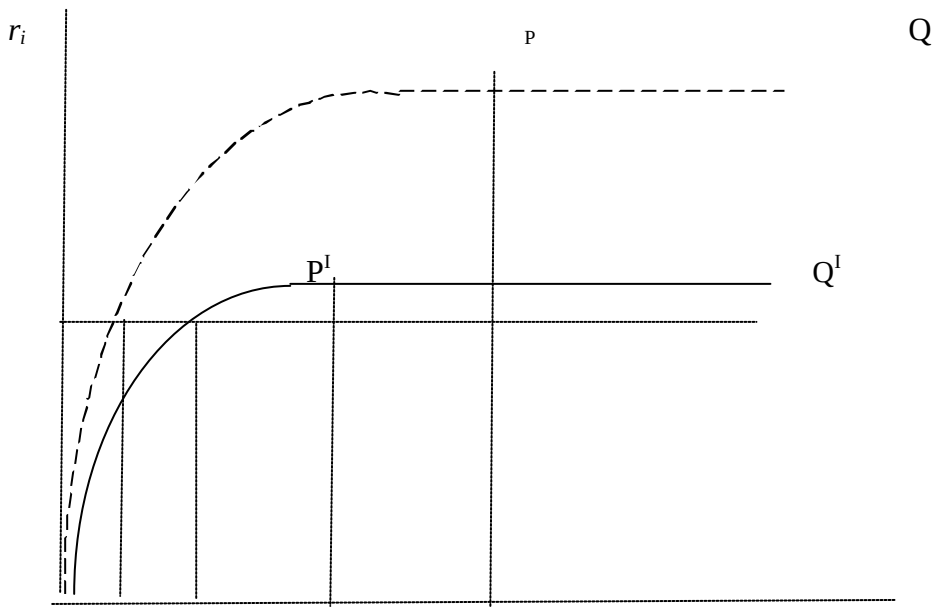

$O \quad V_A \quad V_B \qquad \hat{I}_B \qquad \hat{I}_A \qquad\qquad I_i$

Figure 1

Observation 4.1. If we chose a poverty line in nominal income space, say $0V_A$, we would arrive at a paradoxical situation. Individuals in B whose nominal earnings fell in the region $V_A V_B$ would be considered non-poor, and thus ineligible for benefits from any anti-poverty welfare program. However, there might exist individuals in community A, classified as poor (and thus eligible), who are actually *better off* than some of those in B, with incomes in this region, who are classified as non-poor. Therefore, for consistent and non-discriminatory identification of the poor, we need to move to the space of real incomes and define a poverty line in this space, say z_r, represented by the distance $0Z_r$. But this poverty line in real income space corresponds to two different poverty lines in nominal income space for the two communities, OV_A and OV_B. In particular, the richer community A has the *lower* poverty line, OV_A.

The reason this happens in our setting is clear. All individuals have more than just their nominal income. They have the public good, and individuals in A have more of it. Thus they need less nominal income to reach a given level of real income, and thus a given level of welfare. While this logic is clear, notice that it is very different to the usual logic by which poverty lines in nominal income space are *higher* for societies that are richer. The argument there is that in richer societies the technology for achieving a given level of real well-being may well be more expensive in terms of nominal income. The community model of voluntary provision of public goods provides a different perspective - achieving the same level of real income may be less expensive in terms of nominal income because of the well-being provided by the public good by virtue of community, even to those who do not contribute to its provision.

Given a real poverty line z_r, we specify the FGT class of poverty indices analogously to (1) and (2):

$$P_a = \frac{1}{n}\left\{\sum_{i\in\Pi}\left(1-\frac{r_i}{z_r}\right)^a\right\} = \frac{1}{n}\left\{\sum_{i\in\Pi_A}\left(1-\frac{r\left(I_i, y^A\right)}{z_r}\right)^a + \sum_{i\in\Pi_B}\left(1-\frac{r\left(I_i, y^B\right)}{z_r}\right)^a\right\}, \qquad (14)$$

where the index i ranges over individuals and $?_A$ and $?_B$ are the sets of poor individuals in communities A and B, defined as those whose real incomes are below z_r. We will make the assumption, shown in Figure 1, that the nominal poverty lines corresponding to z_r, OV_A and OV_B, are strictly less than $\hat{I}_A$ and $\hat{I}_B$, respectively. Thus, none of the contributors in either community are among the set of the poor.

To make the poverty measures specified by (14) (which are defined over real rather than nominal incomes) empirically operational, one would need to specify the form of r, as a function of the nominal income distribution in society, in accordance with the restrictions imposed by Lemma 3.1. Two recent analyses along related lines are Basu and Foster (1998) and Jayaraj and Subramanian (2000).

Remark 4.2. Basu and Foster (1998, p.1734), citing earlier studies, argue that 'literate household members generate a *positive externality* or a kind of *public good* for illiterate members' (emphasis theirs). Thus, 'a more even distribution of literacy across households leads to greater effective literacy' (p.1733). They advance a measure of literacy which captures this aspect by ascribing values of 1, 0, and $l \in (0,1)$, respectively, to a literate individual, an illiterate individual living in a household with no literate individual, and an illiterate individual living in a household with at least one literate individual. A straightforward extension of their argument to our more general context suggests the following amendment to the standard nominal income based 'head count' measure of poverty:

$$\hat{H} = \left(\frac{(1-l_A)n_{PA} + (1-l_B)n_{PB}}{n} \right),$$

where $l_A, l_B \in [0,1), l_A > l_B$, and n_{PA}, n_{PB} are the numbers of individuals with incomes below the nominal poverty line in the richer community A and the poorer community B, respectively. The standard (community neutral) head count measure corresponds to $l_A = l_B = 0$. This formulation captures the argument that *effective* poverty in a society is higher if the (nominal income) poor also happen to be concentrated in the poorer

community.[11] Note now that, by Lemma 3.1, an identical conclusion would follow from the real income based 'poverty gap' measure P_1 defined according to (14).

Remark 4.3. Jayaraj and Subramanian (2000) offer an axiomatic formulation for a poverty measure:

$$P_a = \frac{1}{n}\left\{\sum_{i\in\Pi_A}\left(1-\frac{I_i + m_{PA}}{2z}\right)^a + \sum_{i\in\Pi_B}\left(1-\frac{I_i + m_{PB}}{2z}\right)^a\right\},$$

where z is the nominal poverty line, and m_{PA}, m_{PB} are the mean nominal incomes of (nominal income) *poor members* of groups *A* and *B*, respectively. While their intuitive concerns and justifications are very similar to ours, in our formulation, the real incomes of poor members depend on the nominal incomes of *non-poor* members of their community. Furthermore, the separability restriction that they impose, a priori, on their real income function implies that redistribution of nominal income between two poor persons belonging to different groups leaves P_1, i.e., the poverty gap measure, invariant. However, as can be seen from Lemma 3.1, and as we discuss in detail below, this is not the case in our formulation.

Observation 4.4. In our analysis, poverty is defined over real incomes. A poverty measure sensitive to community identities of income poor individuals, yet a function of the *nominal* income distribution, may violate three of the axioms most commonly invoked in the literature on poverty measures, viz., the axioms of *symmetry*, *transfer* and *focus*, when applied to nominal incomes. The symmetry axiom requires the extent of measured poverty to be invariant with respect to a permutation of incomes across individuals.[12] However, by Lemma 3.1, a permutation of nominal incomes between poor individuals belonging to different communities will change their real incomes differently. Hence, all real income based poverty measures specified by (14) will vary if $a > 0$. The transfer axiom, which requires that a rank-preserving nominal transfer from a poor person to a poorer person reduce the extent of poverty, may similarly be violated. The focus axiom, which requires the extent of poverty to be independent of the distribution of non-poor incomes, may be violated since the

11 The axiomatic characterization of such a measure is very similar to that provided by Basu and Foster (1998).

distribution of non-poor nominal incomes determines the real incomes of the poor via the determination of the level of the public good. The symmetry and transfer axioms can be violated only for nominal redistributions *across* communities, but the focus axiom may be violated even by nominal redistributions *within* communities (see Sections 5-6).

5. INCOME BASED TARGETING WITH COMMUNITY EFFECTS

We are now ready to discuss the case where the objective of anti-poverty policy is to minimize poverty defined on real incomes, but using nominal income transfers as the policy instrument. We begin with the assumption that the policy maker can costlessly identify each individual's nominal income, and also knows the real income functions (9) and (10), so that the real incomes can also be identified.

When a = 0, so that the objective is to minimize the head count ratio defined in real income space, if all the poor are strictly below the poverty line then a marginal transfer makes no difference to poverty. But when a =1, a transfer to any one of the poor will reduce poverty. But for which individual, in which community, will the transfer have the biggest impact? From (14) we get:

$$\frac{\partial P_a}{\partial I_i} = -\left(\frac{a}{nz_r}\right)\left(1-\frac{r_i}{z_r}\right)^{a-1}\left(\frac{\partial r_i}{\partial I_i}\right). \qquad (15)$$

The marginal transfer should go to the individual with the highest (absolute) value of (15).

The first term on the right is a constant. When a = 1, the second term is unity. Thus the magnitude of (15) is determined by the third term. But from Lemma 3.1, this is higher for lower nominal income, and rises with public good supply. Consider then I_1, the lowest level of income in either community. In the world of section 2.1, we could transfer nominal income to any poor individual. But in this world of community-specific public goods, the greatest increase in real income comes from making the transfer to those with nominal income I_1 in the *richer* community, *A*. Yet, as is seen from Figure 1, they are also better off than the

12 Common too in social choice theory as 'anonymity', Loury (2000) calls it a stark example of 'liberal neutrality'.

corresponding people in *B*. Seemingly paradoxically, efficient targeting now requires favoring those who are better off to begin with, in direct contrast to the standard targeting literature.

The transfers to those with I_1 in community *A* should continue until $\frac{\partial r}{\partial I}$ for this group falls to the next level observed in the society. This could be the next income level up in *A*, or the lowest level in *B*, depending on further detailed specification of the model. In either case, this enlarged group should now receive transfers in such a fashion as to lower their common value of $\frac{\partial r}{\partial I}$ to the next level observed in the society, and so on. But notice that in order to do this, different individuals in the group receiving transfers may have to be given *different magnitude of transfers,* when that group consists of members of both communities. For example, it follows from (12) that $\frac{\partial^2 r}{\partial I^2} = -\frac{1}{2I}\frac{\partial r}{\partial I}$. Thus, in this case, individuals in the group receiving transfers who belong to the richer community *A* will have to be given higher transfers. This is again a very different conclusion from the standard targeting story of section 2.1.

When $a > 1$, the second term in (15) falls with *r*. Comparing I_1 across the communities, the third term is higher for the individual with nominal income I_1 in *A*, but the second term is lower. The net affect is thus ambiguous. Note now that by (15), impacts on poverty, from marginal transfers to poor individuals with identical nominal incomes but different community affiliations, relate in the following way:

$$\frac{\partial P_a}{\partial I_i^A} = \mathrm{T}^{a-1}\Omega\frac{\partial P_a}{\partial I_i^B}, \text{where } \mathrm{T} = \frac{z_r - r_i^A}{z_r - r_i^B} < 1, \Omega = \frac{\frac{\partial r_i^A}{\partial I_i}}{\frac{\partial r_i^B}{\partial I_i}} > 1. \qquad (16)$$

Clearly, (16) implies if $a = 1$, the absolute value of $\frac{\partial P_a}{\partial I_i^A}$ is greater than that of $\frac{\partial P_a}{\partial I_i^B}$, so that the marginal transfer should go to the individual in the richer community, *A*. Now, since $0 < \mathrm{T} < 1$, T^{a-1} is monotonically decreasing in a for $a \in [1, \infty]$, with $T^{a-1} = 1$ for $a = 1$, and $T^{a-1} = 0$ for $a = \infty$. It follows that there must exist $a^* \in (1, \infty)$ such that the

absolute value of $\frac{\partial P_a}{\partial I_i^A}$ is greater than that of $\frac{\partial P_a}{\partial I_i^B}$ if $a < a^*$, while it is the other way around if $a > a^*$. Summarizing, then, we get the following.

Observation 5.1. There exists a critical value, $a^* \in (1, \infty)$, such that, for all $a \in [1, a^*)$, the targeting rule favors transfers to the poor in the rich community. For all $a \in (a^*, \infty]$, the poverty aversion effect dominates, so that the transfer is to the poor of the poor community.

6. GROUP BASED TARGETING WITH COMMUNITY EFFECTS

We now assume that individual incomes cannot be identified, but those above and below the poverty line can be distinguished in each community. Hence, all poor in each community must be treated identically, irrespective of how poor they are. Let the number of poor individuals in community $k \in \{A, B\}$ be n_{Pk}. Let there be available a budget *c*, assumed so small that no poor people are pushed over the poverty line. The impact on poverty of a marginal transfer to community *k* is then given by:

$$\frac{dP_a}{dc}\Big|_{c=0} = \frac{-a}{nz_r}\left\{\frac{1}{n_{Pk}}\sum_{i\in\Pi_k}\left(1-\frac{r_i}{z_r}\right)^{a-1}\left(\frac{\partial r_i}{\partial I_i}\right)\right\}. \qquad (17)$$

Expression (17) is the community analog of the individual level expression in (15). When $a = 1$, the targeting rule thus depends on the comparison:

$$\left\{\frac{1}{n_{PA}}\sum_{i\in\Pi_A}\left(\frac{\partial r_i}{\partial I_i}\right) \gtrless \frac{1}{n_{PB}}\sum_{i\in\Pi_B}\left(\frac{\partial r_i}{\partial I_i}\right)\right\}. \qquad (18)$$

Suppose nominal income distributions below the poverty line are identical across communities. The standard theory of targeting would then be indifferent between transfers to either group (regardless of a). However, with $a = 1$, since $\partial r / \partial I$ is higher at each income level for the richer community (Lemma 3.1), the targeting rule in this world is to favor the *richer* community, *A*. This illustrates a tendency already noted in section 5. Since, by Lemma 3.1, $\partial^2 r / \partial I^2 < 0$, the same conclusion (and the same contrast with standard theory) will hold if the two communities have identical numbers of poor individuals, but the

distribution of nominal income among the poor in B stochastically dominates that in A (in the first order).

When a exceeds one, with the restrictions on income distributions specified above, there are two forces pulling in opposite directions. While the marginal real income effect favors the richer community, the poverty aversion effect works against it. Increases in the value of a enhance the latter effect. By an argument identical to that used to establish Observation 5.1 above, we then get the following summary.

Observation 6.1. There exists a critical value $a^* \in (1, \infty)$ such that, for all $a \in [1, a^*)$, the targeting rule favors transfers to the poor in the rich community. This is because the impact of monetary transfers on the real incomes of the poor in the richer community is greater, since the richer community has a higher level of public goods. Thus, though every poor person in A is better off than every corresponding poor person in B with the same nominal income, the policy stance nevertheless is to transfer to A. For all $a \in (a^*, \infty]$, the poverty aversion effect dominates, so that the transfer is to the poorer community.

A similar analysis can be conducted for the case where the policy makers can distinguish contributors from non-contributors, but cannot distinguish different incomes among the non-contributory group. Expressions similar to (17) and (18) can be derived, with the numbers of poor replaced by the numbers of non-contributors. If policy makers cannot make this distinction, then there will be some leakage to the contributors, which in turn will affect the levels of the public good. The analysis then is complicated considerably - to the extent that no fresh general insights can be generated, since the outcome now depends on specificities of preferences, income distribution, and the extent of leakage to contributors.

Remark 6.2. In our analysis, we have termed 'richer' the community with the larger amount of the public good. Given the number of contributors, what determines the Nash equilibrium level of the public good in a community is their total income. Redistribution *within* the non-poor segment, from non-contributors to contributors, will increase this level. Thus, total income of the non-poor segment of a community and its distribution are both relevant for

determining whether that community will be better endowed with public goods. It follows from our analysis that both aspects are also relevant for determining optimal anti-poverty targeting rules. Yet neither is relevant in the traditional framework.

Remark 6.3. If the anti-poverty program takes the form of direct provision of public goods rather than income supplements, then Lemma 3.1 generates the unsurprising conclusion that the poorer community should receive such public goods (assuming, as before, identical distribution of nominal incomes below the poverty line in the two communities).

7. GENERALIZATIONS

In our formal analysis we have assumed that there is no cross-community sharing of any public good. In reality, of course, members of, say, two religious groups may have common access to some public goods, say roads, while each community may only have access to its own source of drinking water and village security. Assuming, as before, that the poor do not contribute to the upkeep of any public good, our conclusions will continue to hold in this more general context.

We have focused on public goods generated from inputs purchased with monetary contributions by individuals. Our analysis is essentially driven by the idea that the rich contribute more money for public goods. Individuals however often voluntarily contribute time, rather than money, towards local public goods. Examples include labor contributions for village roads and school buildings, voluntary service at the local mosque or community center, participation in community policing, etc. How would this change our analysis? So long as one's voluntary labor contributions can be substituted by inputs purchased from the market, and individuals can choose between labor and monetary contributions, our analysis does not substantively change. The market value of bricks supplied free by a brick-kiln owner for the construction of a village well can be thought of, for analytical purposes, as her monetary contribution. Analogously, an individual who volunteers for a neighborhood night patrol can be thought of as contributing the cost of hiring a security guard. Valued at market prices, richer individuals are still likely to contribute more overall towards local public

goods.[13] Suppose now that the public good technology is fixed coefficients for individuals, i.e., the scope for substituting one's time input by inputs purchased from the market is extremely limited. If individuals face the same wage rate in the labor market, richer individuals would continue to contribute more. Thus, our analysis would be relevant even in this setting, provided earnings differentials are primarily generated by differences in non-labor income. Lastly, suppose that the public good technology is fixed coefficients, and richer individuals face higher wage rates. Then, despite all goods being normal, the rich may become non-contributory, since (a) they cannot substitute labor contributions by monetary contributions, and (b) the opportunity cost of labor contributions, in terms of foregone private consumption, is higher for them. However, this outcome is not a certainty: the substitution effect reduces contributions by the rich, but the income effect increases it. Thus, it seems reasonable to conclude that our analysis would be relevant for a large, perhaps even preponderant, class of situations observed in reality, even when individuals contribute time or other inputs in kind.

We have modeled the supply of the public good as a one-period Cournot game of voluntary contributions. This appears a reasonable approximation for relatively large, anonymous communities, but may be less so for smaller ones, which often exhibit repeated face-to-face interactions.[14] The inefficiency entailed by decentralized provision may be reduced by mechanisms familiar from the literature on repeated games in such cases. Local government institutions when communities are geographically defined, and governance structures internal to ethnic, religious or caste based communities often perform a similar function. Such considerations are compatible with our analysis. The contributions of the non-poor may be determined in any fashion whatsoever, provided the poor (i) are allowed access to the public good for an identically fixed (possibly 0) contribution, and (ii) would nevertheless be better off if the money spent on the public good was instead transferred directly to them. More formally, the public good supply can be determined by any mechanism that has the following

13 With exogenously given total labor supply, this is true regardless of the market price of one's labor. In a three good model with endogenous labor supply, given normality for all goods, it is again true if wage rates are identical across income classes. However, in such a model, if wage rates are assumed higher for richer individuals, one would need some additional, though commonplace, restrictions on preferences to sustain this claim.

14 See Baland and Platteau (2003) and Ostrom (1990) for discussions.

properties. First, there exists a level of nominal income, say t, such that all group members with nominal incomes less than t can access the group's public good for a fixed, possibly zero, contribution, say $w \geq 0$, and are free to contribute more than this minimum if they so wish.[15] Second, this mechanism generates an equilibrium such that, for some nominal income level $\underline{t} \leq t$, all community members earning $\underline{t}$ or less would choose to contribute exactly w, whereas at least some community members earning more than $\underline{t}$ would contribute some other amount. It can be easily seen that, given A1-A3, the partial derivative properties of the real income function specified by Lemma 3.1 must hold for all members earning less than $\underline{t}$. Now suppose, as before, that the nominal poverty line for the community is less than $\underline{t}$. Then our conclusions, as summarized in Observations 4.1, 4.4, 5.1 and 6.1, will all continue to hold. One can also formulate more complicated mechanisms with a similar structure. Thus, the Cournot formulation is not crucial to our analysis.

8. CONCLUSION

In this paper, we have explored the joint consequences, of (a) identifying communities with community-specific public goods, and (b) identifying poor individuals with different communities, for the results of the targeting literature. We have shown that a number of standard results of the literature on targeting of anti-poverty programs change when these two aspects are taken into consideration. In particular, efficient targeting of anti-poverty programs may require favoring of poor members of the richer community. Furthermore, total income of *non-poor* members of a community, and its distribution, both turn out to be important for determining optimal anti-poverty targeting rules.

Our purpose has been to provide a conceptual framework that enables one to integrate issues surrounding community identity with those related to anti-poverty targeting.

---

15 Communities are indeed often observed to follow such rules of thumb, motivated both by equity and enforcement cost considerations, just as governments often exempt the poor from many kinds of taxes and fees.

Application of this framework to specific policy contexts will require further assumptions regarding the functional forms used to represent preferences and the distribution of nominal income. We have also abstracted from behavioral responses to anti-poverty targeting. Of particular interest is the possibility of changing community affiliations in response to interventions targeted towards the poor in specific communities. While forms of identity such as ethnicity, caste, language or religion may often be considered relatively stable, and therefore *individually* exogenous (because prohibitively costly to alter at the individual level), other forms such as geographic location or residential neighborhoods may be somewhat less so.

One often observes governments discriminating among poor individuals on the basis of their race, ethnicity, caste, religion or geographic location. For example, federal and local governments in India often use caste information to select beneficiaries of anti-poverty programs. Many such programs are also run only in rural areas or in particular parts of the country. Many other countries similarly use racial or ethnic origins as the targeting indicator. These forms of 'positive' discrimination are commonly justified as appropriate responses to historically given 'collective disadvantage'. Furthermore, affirmative action programs that largely benefit the non-poor within the disadvantaged communities are often justified in the public discourse in terms of their indirect positive effects on the poorer segments through some intra-community trickle-down process. Our analysis can be thought of as providing one way of formalizing these notions of historical disadvantage and intra-community trickle-down, and of elaborating on their implications for anti-poverty targeting policy. While our results provide some justification for discriminating among the poor on the basis of their community affiliation, two major caveats are in order. First, targeting sections of the poor on the basis of their community affiliation may also serve to strengthen existing identity divides by reducing the incentive for cross-community sharing of public goods, and thereby exacerbate communal conflicts.[16] Second, actual targeting policies are not generated by technocrats functioning within a political vacuum. That the freedom for governments to discriminate

16 On the connection between cross-community sharing of public goods and a reduction in inter-community conflict, see Dasgupta and Kanbur (2005).

among the poor will necessary generate a better social outcome in a political-economic equilibrium is by no means certain. Both issues require independent analysis.

Decentralization of anti-poverty programs, where resources are provided to a local governing entity to then be targeted within the locality, has been analyzed in the literature. This analysis has emphasized informational asymmetries as the basis for gains from decentralization. We anticipate that the results of this literature would also be modified significantly if the decentralization is to an administrative body which governs a community in our sense. These extensions are all useful areas for further research.

REFERENCES

Akerlof, G., "The economics of "tagging," as applied to the optimal income tax, welfare programs and manpower planning", *American Economic Review* 68 (1978), 8-19.

Alesina, A., Baqir, R. and Easterly, W., "Public Goods and Ethnic Divisions", *Quarterly Journal of Economics* 114 (1999), 1243-1284.

Alesina, A., and La Ferrara, E., "Participation in Heterogeneous Communities", *Quarterly Journal of Economics* 115 (2000), 847-904.

Atkinson, A.B. and Bourguignon, F., "Poverty and inclusion from a world perspective", in H de la Largentaye, P. Muet, J. Rischard and J. Stiglitz, eds. *Governance, Equity and Global Markets* (2000), Paris, La Documentation Française.

Baland, J.-M. and Platteau, J.-P., "Economics of common property management regimes", in K.G. Maler and J. Vincent, eds. *Handbook of Environmental Economics* Volume 1 (2003), Amsterdam, Elsevier North-Holland.

Basu, K. and Foster, J., "On Measuring Literacy", *Economic Journal* 108 (1998), 1733-1749.

Benabou, R., "Human capital, inequality and growth: a local perspective", *European Economic Review* 38 (1994), 817-826.

Bergstrom, T., Blume, L. and Varian, H, "On the private provision of public goods", *Journal of Public Economics* 29 (1986), 25-49.

Besley, T. and Kanbur, R., "Food subsidies and poverty alleviation", *Economic Journal* 98 (1988), 701-719.

Besley, T. and Kanbur, R., "Principles of targeting", in M. Lipton and J. van der Gaag, eds. *Including the Poor* (1993), Washington DC, The World Bank.

Borjas, G., "Ethnicity, neighborhoods, and human-capital externalities", *American Economic Review* 85 (1995), 365-390.

Bourguignon, F. and Fields, G., "Poverty measures and anti-poverty policy", *Recherches Economique de Louvain*, 56 (1990), 409-428.

Bowles, S. and Gintis, H. (2000): "Optimal parochialism: the dynamics of trust and exclusion in networks" (2000), (mimeo), Department of Economics, University of Massachusetts, Amherst.

Dasgupta, I. and Kanbur, R., "Bridging communal divides: separation, patronage, integration", in C. Barrett, ed. *The Social Economics of Poverty*: *On Identities, Groups, Communities and Networks* (2005), London, Routledge.

Dasgupta, I. and Kanbur, R., "How workers get poor because capitalists get rich: a general equilibrium model of labor supply, community and the class distribution of income", CREDIT Research Paper No. 02/12 (2002), School of Economics, University of Nottingham.

Dasgupta, I. and Kanbur, R., "Class, community, inequality", CREDIT Research Paper No. 02/04 (2001), School of Economics, University of Nottingham.

Durlauf, S., "Spillovers, stratification, and inequality", *European Economic Review* 38 (1994), 836-845.

Foster, J., Greer, J. and Thorbecke, E., "A class of decomposable poverty measures", *Econometrica* 52 (1984), 761-766.

Jayaraj, D. and Subramanian, S., "Group affiliation, externality and the measurement of poverty" (2000), (mimeo), Madras Institute of Development Studies, Madras.

Kanbur, R., "Measurement and alleviation of poverty", *IMF Staff Papers* 36 (1987), 60-85.

Kanbur, R., Keen, M. and Tuomala, M., "Labor supply and targeting in poverty alleviation programs", *World Bank Economic Review* 8 (1994), 191-211.

Loury, G., "Racial Justice", Lecture 3 of the DuBois Lectures, Harvard University, April 17 (2000), www.bu.edu/irsd/files/DuBois_3.pdf.

Ostrom, E., *Governing the Commons: The Evolution of Institutions for Collective Action* (1990), New York, Cambridge University Press.

Ravallion, M., "Poverty alleviation through regional targeting: a case study for Indonesia", in K. Hoff, A. Braverman and J. Stiglitz, eds., *The Economics of Rural Organization: Theory, Practice and Policy* (1993), Oxford, Oxford University Press.

Ravallion, M., "Are poorer states worse at targeting their poor?" *Economics Letters* 65 (1999), 373-377.

Ravallion, M. and Chao, K., "Targeted policies for poverty alleviation under imperfect information: algorithms and applications", *Journal of Policy Modeling* 11 (1989), 213-224.

Ravallion, M. and Lokshin, M., "On the utility consistency of poverty lines" (2003), (mimeo), The World Bank, Washington DC.

Sen, A.K., "Poverty: an ordinal approach to measurement", *Econometrica* 44 (1976), 219-231.

Wood, N., "An effort to unify a Bosnian city multiplies frictions", *New York Times* March 15, 2004.

CREDIT PAPERS

03/01 **Stephen Dobson, Carlyn Ramlogan and Eric Strobl,** "Why Do Rates of Convergence Differ? A Meta-Regression Analysis"

03/02 **Robert Lensink and Habeab T. Mehrteab,** "Risk Behaviour and Group Formation in Microcredit Groups in Eritrea"

03/03 **Karuna Gomanee, Oliver Morrissey, Paul Mosley and Arjan Verschoor,** "Aid, Pro-Poor Government Spending and Welfare"

03/04 **Chris Milner and Evious Zgovu, "**Export Response to Trade Liberalisation in the Presence of High Trade Costs: Evidence for a Landlocked African

03/05 **Mark McGillivray and Bazoumana Ouattara,** "Aid, Debt Burden and Government Fiscal Behaviour in Côte d'Ivoire"

03/06 **José Antonio Alonso and Carlos Garcimartin,** "Poverty Reduction and Aid Policy"

03/07 **Salvador Barrios, Luisito Bertinelli and Eric Strobl,** "Dry Times in Africa"

03/08 **Sam Laird, Santiago Fernandez de Cordoba and David Vanzetti,** "Market Access Proposals for Non-Agricultural Products"

03/09 **Indraneel Dasgupta and Ravi Kanbur,** "Bridging Communal Divides: Separation, Patronage, Integration"

03/10 **Robert Osei, Oliver Morrissey and Tim Lloyd,** "Modelling the Fiscal Effects of Aid: An Impulse Response Analysis for Ghana"

03/11 **Lucian Cernat and Sam Laird,** "North, South, East, West: What's best? Modern RTAs and their Implications for the Stability of Trade Policy"

03/12 **Indraneel Dasgupta and Diganta Mukherjee,** "'Arranged' Marriage, Dowry and Female Literacy in a Transitional Society"

03/13 **Karuna Gomanee, Sourafel Girma and Oliver Morrissey,** "Aid, Public Spending and Human Welfare: Evidence from Quantile Regressions"

03/14 **Luisito Bertinelli and Eric Strobl,** "Urbanization, Urban Concentration and Economic Growth in Developing Countries"

03/15 **Karuna Gomanee, Sourafel Girma and Oliver Morrissey, "**Searching for Aid Threshold Effects"

03/16 **Farhad Noobakhsh, "**Spatial Inequality and Polarisation in India"

03/17 **Evious K. Zgovu,** "The Implications of Trade Policy and 'Natural' Barriers Induced Protection for Aggregate Demand for Imports: Evidence for Malawi"

03/18 **Normal Gemmell and Oliver Morrissey,** "Tax Structure and the Incidence on the Poor in Developing Countries"

03/19 **Alan Harding,** "Did the Tanzanian Manufacturing Sector Rebound in the 1990s? Alternative Sources of Evidence"

03/20 **Paul Mosley, Farhad Noorbakhsh and Alberto Paloni,** "Compliance with World Bank Conditionality: Implications for the Selectivity Approach to Policy-Based Lending and the Design of Conditionality"

03/21 **Evious K. Zgovu,** "Price Transmission, Domestic Relative Incentives and Inter-sector Resource Flow Analysis"

04/01 **Chris Milner and Verena Tandrayen,** "The Impact of Exporting and Export Destination on Manufacturing Wages: Evidence for Sub-Saharan Africa"

04/02 **Sam Laird, Ralf Peters and David Vanzetti,** "Southern Discomfort: Agricultural Policies, Trade and Poverty"

04/03 **Santiago Fernandez de Córdoba, Sam Laird and David Vanzetti,** "Trick or Treat? Development Opportunities and Challenges in the WTO Negotiations on Industrial Tariffs

04/04 **Santiago Fernandez de Córdoba, Sam Laird and David Vanzetti,** "Blend it like Beckham – Trying to read the Ball in the WTO Negotiations on Industrial Tariffs

04/05 **Bazoumana Outttara,** "Modelling the Long Run Determinants of Private Investment in Senegal"

04/06 **Indraneel Dasgupta and Sugata Marjit,** "Evasive Reform: Informalisation in a Liberalised Economy with Wage-setting Unions"

04/07 **Bazoumana Ouattara and Eric Strobl,** "Foreign Aid Inflows and the Real Exchange Rate in the CFA Franc Zone"

04/08 **Christophe Muller and Christophe Nordman,** "Which Human Capital Matters for Rich and Poor's Wages? Evidence from Matched Worker-Firm Data from Tunisia"

04/09 **David Lawson,** "Determinants of Ill Health in Uganda – Is it just the Wealthy that are more Healthy?"

04/10 **David Fielding and Anja Shortland,** "Are Americans more Gung-Ho than Europeans? Some Evidence from Tourism in Israel during the Intifada"

04/11 **Maxwell Opuku-Afari,** "Measuring the Real Effective Exchange Rate (REER) in Ghana"

04/12 **Maxwell Opuku-Afari, Oliver Morrissey and Tim Lloyd,** "Real Exchange Rate Response to Capital Inflows: A Dynamic Analysis for Ghana"

05/01 **Indraneel Dasgupta and Ravi Kanbur,** "Community and Anti-Poverty Targeting"

Members of the Centre

Director

Oliver Morrissey - aid policy, trade and agriculture

Research Fellows (Internal)

Simon Appleton – poverty, education, household economics
Adam Blake – CGE models of low-income countries
Mike Bleaney - growth, international macroeconomics
Indraneel Dasgupta – development theory, household bargaining
Norman Gemmell – growth and public sector issues
Ken Ingersent - agricultural trade
Tim Lloyd – agricultural commodity markets
Chris Milner - trade and development
Wyn Morgan - futures markets, commodity markets
Christophe Muller – poverty, household panel econometrics
Trudy Owens – survey analysis, poverty, employment
Tony Rayner - agricultural policy and trade

Research Fellows (External)

Manuela Francisco *(University of Minho)* – inflation and exchange rate regimes
David Fielding *(University of Otago)* – investment, monetary and fiscal policy
Ravi Kanbur (*Cornell*) – inequality, public goods – Visiting Research Fellow
Henrik Hansen *(University of Copenhagen)* – aid and growth
Stephen Knowles *(University of Otago)* – inequality and growth
Sam Laird (*UNCTAD*) – trade policy, WTO
Robert Lensink *(University of Groningen)* – aid, investment, macroeconomics
Scott McDonald *(University of Sheffield)* – CGE modelling, agriculture
Mark McGillivray *(WIDER, Helsinki)* – aid allocation, aid policy
Andrew McKay *(University of Bath)* – household poverty, trade and poverty
Doug Nelson *(Tulane University)* - political economy of trade
Farhad Noorbakhsh *(University of Glasgow)* – inequality and human development
Robert Osei *(GIMPA, Ghana)* – macroeconomic effects of aid
Alberto Paloni *(University of Glasgow)* – conditionality, IMF and World Bank
Eric Strobl *(University of Paris)* – labour markets
Finn Tarp *(University of Copenhagen)* – aid, CGE modelling