ECONSTOR
Make Your Publications Visible.

A Service of
ZBW
Leibniz-Informationszentrum Wirtschaft
Leibniz Information Centre for Economics

Junius, Karsten

Working Paper — Digitized Version

Economic development and industrial concentration: An inverted U-curve

Kiel Working Paper, No. 770

Provided in Cooperation with:
Kiel Institute for the World Economy – Leibniz Center for Research on Global Economic Challenges

Suggested Citation: Junius, Karsten (1996) : Economic development and industrial concentration: An inverted U-curve, Kiel Working Paper, No. 770, Kiel Institute of World Economics (IfW), Kiel

This Version is available at:
https://hdl.handle.net/10419/46937

Standard-Nutzungsbedingungen:

Die Dokumente auf EconStor dürfen zu eigenen wissenschaftlichen Zwecken und zum Privatgebrauch gespeichert und kopiert werden.

Sie dürfen die Dokumente nicht für öffentliche oder kommerzielle Zwecke vervielfältigen, öffentlich ausstellen, öffentlich zugänglich machen, vertreiben oder anderweitig nutzen.

Sofern die Verfasser die Dokumente unter Open-Content-Lizenzen (insbesondere CC-Lizenzen) zur Verfügung gestellt haben sollten, gelten abweichend von diesen Nutzungsbedingungen die in der dort genannten Lizenz gewährten Nutzungsrechte.

Terms of use:

Documents in EconStor may be saved and copied for your personal and scholarly purposes.

You are not to copy documents for public or commercial purposes, to exhibit the documents publicly, to make them publicly available on the internet, or to distribute or otherwise use the documents in public.

If the documents have been made available under an Open Content Licence (especially Creative Commons Licences), you may exercise further usage rights as specified in the indicated licence.

WWW.ECONSTOR.EU

Mitglied der Leibniz-Gemeinschaft

Kieler Arbeitspapiere
Kiel Working Papers

Kiel Working Paper No. 770

Economic Development and Industrial Concentration:

An Inverted U-Curve

by

Karsten Junius

Institut für Weltwirtschaft an der Universität Kiel
The Kiel Institute of World Economics

ISSN 0342 - 0787

Kiel Institute of World Economics

Department IV

24100 Kiel, Germany

Kiel Working Paper No. 770

Economic Development and Industrial Concentration: An Inverted U-Curve

by

Karsten Junius

October 1996

723231

The author himself, not the Kiel Institute of World Economics, is solely responsible for the contents and distribution of each Kiel Working Paper.

Since the series involves manuscripts in a preliminary form, interested readers are requested to direct criticisms and suggestions directly to the author and to clear any quotation with him.

Economic Development and Industrial Concentration: An Inverted U-Curve

Abstract

This paper sets up an economic geography model to show the endogenous forces that determine the degree of industry concentration in the course of economic development. The model includes centrifugal forces, such as home market effects and access to intermediate suppliers, and centripetal forces, such as demand pull of dispersed resources and congestion effects. Economic development increases the size of the industrial sector in terms of employment relative to the size of the agricultural sector. The relative strength of centripetal and centrifugal forces depends on the initial industry distribution, transport costs, and the level of economic development. These parameters lead to an inverted U-curve pattern of industry concentration, which is first increasing and then decreasing with per capita GDP. The model shows why the curve is more pronounced in newly industrializing economies than in industrialized countries, thereby explaining exceptionally high primacy ratios in today's developing countries.

JEL-classification: R11, R12

Keywords: Economic Geography, Agglomeration, Industrialization, Development

Karsten Junius
Kiel Institute of World Economics
Düsternbrooker Weg 120, D-24105 Kiel, Germany
Phone: (0431) 8814497, Fax: (0431) 85853
E-mail:Junius@ifw.uni-kiel.de

Postscript available on: http://www.uni-kiel.de:8080/ifw/pub/kap/kap770.html

1. Introduction*

The concentration of economic activities varies considerably in the course of economic development. In a classic study across 24 countries, Williamson (1965) showed that economic development first leads to regional divergence, but that more mature stages of economic development lead to regional convergence. He supports his cross-country findings by time series analyses for single countries. Kim (1995) analyzed the regional distribution of economic activities in the US between 1860 and 1987. He finds diverging regional specialization until the turn of the century and converging patterns of industrial production since the 1930s. In a study across 38 countries, Wheaton and Shishido (1981) also find that concentration is first increasing and then decreasing with per capita GDP.[1] Table 1 shows the population in the capital city in percent of the total population and in percent of the urban population. These ratios are highest for middle income countries.

---

* For helpful comments on a previous version, I would like to thank Erich Gundlach, Andreas Kopp, Michael Pflüger, Dieter Urban and seminar participants in Hamburg and Kiel.

1 See also Carroll (1982) for a survey on the empirical literature on national city size distribution and economic development.

Table 1 — Concentration and Urbanization

Country group	Population of capital city in percent of		Urban population in percent of total		Population in urban agglomeration of 1 million or more in 1990 in percent of urban	
	Urban 1990	Total 1990	1980	1994	1980	1994
World	15	6	39	45	34	35
Low-income economies	12	3	22	28	32	34
China and India excluded	27	7	23	29	29	31
Middle-income economies	26	14	52	61	32	33
Lower middle-income	n.a.	n.a.	47	56	28	30
Upper middle-income	22	15	64	74	40	40
High-income economies	11	9	76	77	40	43

Source: World Development Report (1994; 1996).

The concentration of economic activities also varies considerably across countries. For instance, only 4 percent of the urban population in Germany is living in the capital city, while the percentage is 36 for Korea. These differences can not only be explained by different levels of economic development. In general, one finds lower levels of concentration in European countries and countries that industrialized relatively early than in developing countries even at comparable GDP levels (World Bank 1994, United Nations, 1995, Bairoch, 1988, Bairoch et al. 1988).

This empirical evidence can be summarized as two stylized facts that will be explained in this paper. First, industrial concentration within an economy first

increases and then decreases with the level of economic development, thus, exhibiting an inverted U-curve relationship. Second, the inverted U-curve is less pronounced for European countries and countries that industrialized relatively early than for countries that industrialized just recently.

So far, a rigorous theoretical explanation for these stylized facts is missing. In this paper, I show that the observed differences in the concentration of industrial activities can be explained by an economic geography model. Economic geography models have first been proposed by Krugman (1991, 1992, 1993), Venables (1996), Krugman and Venables (1995, 1996) and Fujita and Krugman (1995). They have been related to urbanization topics by Puga (1994), and to economic development by Puga and Venables (1996). Congestion effects have been included in economic geography models by Brakman et al. (1993) and Junius (1996). The model suggested here is an extension of this strand of the literature. It adds the spatial effects of economic development and congestion to the previous economic geography framework. Economic geography models generally include centrifugal and centripetal forces. Depending on the relative strength of these forces, further concentration or a more equal dispersion of industries may result from an adjustment process. Possible centrifugal and centripetal forces are discussed in section 2 of this

paper. Section 3 presents a formal model that incorporates these forces. Section 4 discusses the mechanics of the model. Section 5 explains different patterns of industry location in light of the model. Section 6 summarizes.

2. Centripetal and Centrifugal Forces

Centripetal forces have long been studied and applied in spatial models. Fujita and Thisse (1996) survey this literature. One force, first modeled by Krugman (1980) and used in all economic geography models, are home market effects. Home market effects imply that the larger region has the advantage of a larger market for its own products, so that home firms face a relatively higher demand. A further advantage of being in the larger market is the presence of a larger number of firms in that region. This implies a better access to a larger number of intermediate suppliers so that a larger percentage of intermediate inputs can be bought without paying additional transport costs. Thus, input-output linkages between firms lead to external economies of scale, which favor industrial concentration. Further centripetal forces, so far not considered in economic geography models, are a pooled labor market, technological or knowledge spillovers, and natural advantages of particular sites.

In the literature, different weights have been assigned to different *centrifugal forces*. Probably the first to write about the limits of regional concentration of

the population were the ancient Greeks (Bairoch, 1988, pp. 74/75). Plato calculated the ideal republic to have exactly 5040 citizens. Aristotle emphasized the public function of cities and considered it to be vital that the citizens knew each other.[2]

However, also Greek cities quickly surpassed what Aristotle called "unsurpassable limits". But, ancient cities remained limited in size for a more basic reason, which was the supply of food to the city. Since food perishes in transit, people had to live close to food supplies. The size of a city then depended on the quality of its soil and the size of its hinterland that could provide it with livestock and grain. The domestication of pack animals, improvements in the transport infrastructure, and the ability to store food increased the area that could supply a city with food such that cities could grow to larger sizes. Today, the supply of agricultural goods is no constraint to city growth anymore. Hence, it neither is an important centrifugal force. Therefore,

---

2 In this context citizens probably mean male urban adults entitled to vote. For Plato and Aristotle a city was constrained by the size that public meetings can have with all citizens present.

the level of transport costs for agricultural goods is set to zero, for simplicity, in all economic geography models.[3]

In the course of economic development, production usually shifts from the primary sector to the industrial sector (Syrquin, 1989). Centripetal forces may set incentives for the industrial sector to locate concentrated in the core. However, the former focus of an economy on the primary sector provides a longer lasting centrifugal force. The primary sector is dependent on natural resources like land for agriculture or deposits for mining. Both are dispersed over the economy, and so are the people engaged in these activities. Thus, the initial distribution of the population is dispersed at the outset of the transformation towards an industrial society. Consequently, the demand for industrial goods also is dispersed over the economy. Firms located in the core of an economy have to pay transport or trade costs when selling to the peripheral part of the population. Therefore, firms may also have an incentive to locate in the periphery to save on these transport costs. Economic geography models

---

3 This does not mean that transport and trade costs for agricultural goods are negligible. Indeed, usually, they are higher than for industrial goods. However, today, agricultural goods can be bought from all parts of the world so that their availability does not limit city growth anymore. Thus, they are negligible for the forces that an economic geography model should describe.

show that the level of trade and transport costs determines whether firms may want to locate in the core or the periphery of an economy (Krugman, 1991; Krugman and Venables, 1995). For high transport costs of industrial goods, the demand of the peripheral and dispersed part of the population constitutes a strong centrifugal force in favor of dispersion of industrial production.

Transport costs have been falling dramatically during the last two centuries (Mokyr, 1990). This has contributed to ever larger urban agglomerations with numerous of them surpassing 1 million inhabitants (see Table 1). For low transport costs, market forces provide strong incentives to locate where others do. This, however, has significant external effects. For instance, higher concentration leads to more severe traffic jams, which directly increase the costs of doing business in that location. Also, crime and pollution are higher in large scale agglomerations. These so called congestion effects limit the advantages of being in the concentrated region.[4]

Policy actions may try to avoid or internalize these external effects, for instance by tighter restrictions on residential housing, industrial production and pollutant emissions. These regulations lead to an internalization of externalities, which

---

4 See Tolley and Thomas (1987) and Markusen (1994) for the severity of these external effects of large scale agglomerations and attempts to limit these effects by regional policy.

indirectly increases the costs of doing business at the more concentrated location. Such a policy response may be more relevant in high income countries in which the sensitivity towards environmental pollution is more pronounced than in low income countries.[5]

Finally, land rents or commuting costs as the „classical" centrifugal force should be mentioned in this section. It is often argued that land rents rise with the size of an agglomeration and may lead to industry dispersion (Alonso, 1964; Muth, 1969;). This argument has been incorporated in economic geography models by Brezis and Krugman (1993) and Krugman and Livas (1996). Here, I do not model land rents because if at all they are factor prices and thus dependent on the relative strength of centripetal and centrifugal forces. Land

---

5 It can be observed that environmental concerns and regulations are higher in high income countries. OECD (1991) suggests that public demand for environmental quality rises with income and induce a policy response to pollution. Grossman and Krueger (1995), World Bank (1992), Seldon and Song (1994) show that the relationship of environmental quality and per capita GDP takes the form of an inverted-U across countries. For regional air pollution in US counties, Grossman et al. (1994) show a negative correlation with income levels. See Grossman (1995) and Stern et al. (1996) for surveys of this literature. The inverted U-shaped relationship of pollution and per capita GDP means that high income countries spent more money on pollution prevention technologies and abatement than low income countries and, therefore, react more actively against the negative external effects of concentration.

rents may be an important factor to explain the location of single firms. They cannot explain the migration of a bunch of firms, because that would lower the equilibrium land rents in turn. A centrifugal force, however, should explain migration of more than a few firms. Therefore, land rents are always proportional to the strength of the agglomeration economics, and they cannot be an independent centrifugal force.

Concluding, one can say that an economic geography model describing the distribution of industries for modern times should consider the linkage and home market effects as centripetal forces. As centrifugal forces, it should consider the demand of the dispersed part of the population and congestion effects. Such a model will be presented in the next section.

3. The Model

In this section, I present an economic geography model to show the relative strength of centripetal and centrifugal forces. I assume the economy to consist of a core region (c) and a peripheral region (p). The economy has an agricultural sector and an industrial sector. The agricultural sector is subject to constant returns to scale and employs farmers. The industrial sector is subject to increasing returns to scale and employs workers.

Farmers and workers share the same utility function. The utility function can be expressed in the standard Dixit-Stiglitz (1977) formulation augmented by the existence of a subsistence level of agricultural products, A_s.

(2.1) $$U = M^{\phi}(A - A_s)^{1-\phi}, \qquad 0 < \phi < 1,$$

where $$M = \left[\sum_{j=1}^{N} m_j^{\frac{\sigma-1}{\sigma}} \right]^{\frac{\sigma}{\sigma-1}}.$$

M is an aggregate of a large number (N) of potential manufactured product varieties, m_j. σ is the constant elasticity of substitution between the product varieties. ϕ is the marginal propensity of income to spend on manufactured goods, M. $1-\phi$ is the marginal propensity to spend on agricultural goods, after the subsistence level of agricultural goods is consumed. From this the average share of income in the core and in the periphery spent on manufactured and agricultural goods can be calculated and is expressed as ε and $1-\varepsilon$:

(2.2) $$\varepsilon_c = \phi\,(capy_c - A_s)/capy_c$$

and $$1-\varepsilon_c = 1-\phi\,(capy_c - A_s)/capy_c\ ,$$

where *capy* is real per capita income. This type of utility function assures that a higher income shifts consumption from agricultural towards manufactured goods. Manufactured products can be consumed and used as intermediate goods in production. The choice of the CES-subutility function reflects preferences for variety. Consumers increase their utility from a given amount of spending on manufactured products if they buy as many different varieties as possible i.e. they have preferences for variety. This also holds for producers, whom the availability of a large number of differentiated intermediate inputs imply that the most suitable and specialized inputs can be used in the production process.

Production per firm, Q_{cj}, can be described by the input demand function:

(2.3) $$Z_{cj} = a + g_c b Q_{cj} \ ,$$

where $a = b = \beta\,(0.9)^t$ and $g_c = e^{f(N_c)}$, $f, \beta, t, > 0.$

Z are inputs, a are the fixed input requirements, b are the variable input requirements, and t is time. Productivity increases in a Hicks-neutral way, and is assumed to reduce fixed and variable input requirements by 10 percent per time period. Congestion effects (g) increase the variable input requirements of production due to bottlenecks in the infrastructure like traffic jams, prevention

of crime, and pollution prevention and abatement. Congestion effects are dependent on the number of firms (N_c).

Due to fixed costs, firms produce with internal economies of scale. Industrial goods are differentiated goods, which are close, but imperfect substitutes. In order to save on additional fixed costs, each firm produces only one good. Because no firm wants to share the demand for its good with any other producer and because goods can be differentiated costlessly, every firm produces a different variety of the industrial good. As a result, the number of firms equals the number of industrial goods. Firms have some monopoly power, because they are the only supplier of a specific variety. Thus, they face a downward sloping demand curve and set their price with a mark-up over marginal costs. However, free market access guarantees that prices equal average costs. This leads to the following two conditions for prices of industrial goods, p, expressed in input units:

(2.4) $$p_{cj} = g_c\, b \frac{\sigma}{\sigma - 1} \quad \text{and}$$

(2.5) $$p_{cj} = \frac{a}{Q_{cj}} + g_c b \; .$$

Bibliothek
des Instituts für Weltwirtschaft

Inputs in production, Z_{cj}, are a composite of workers, L, and intermediate goods. Workers have a share of $1-\mu$ in total inputs, and intermediate inputs have a share of μ :

$$(2.6) \qquad Z_{cj} = L_{cj}^{1-\mu} M_j^{\mu} \ .$$

Firms employ labor and intermediate inputs in such a proportion that the ratio of wages and the price index of intermediate inputs equals the marginal rate of technical substitution of intermediate goods and labor:

$$(2.7) \qquad \frac{w_c}{T_c} = \frac{1-\mu}{\mu} \frac{M_j}{L_{cj}} \ .$$

T is the price index for industrial goods. A firm uses intermediate goods from its own (say home) region and the other (say foreign) region. The relationship with which industrial goods from the two regions are used depends on the price of the goods and the elasticity of substitution between the goods. The price for home varieties equals their marginal costs times the mark-up. For foreign varieties, transport costs have to be paid in addition. The amount of each foreign good used is inversely related to transport costs, because transport costs are included additionally in the price of foreign goods. For simplicity, I assume „iceberg-type“ transport costs. This means that $\tau > 1$ goods have to be shipped

for one good to arrive. The price of an imported good, therefore, is τ times the price that it is charged in its region of origin. The regional price index for industrial goods results from the weighted prices of home and foreign intermediate goods:

(2.8)

$$T_c = \left[\frac{N_c}{N_c + N_p} \left(\frac{\sigma}{\sigma - 1} MC_c \right)^{1-\sigma} + \frac{N_p}{N_c + N_p} \left(\tau \frac{\sigma}{\sigma - 1} MC_p \right)^{1-\sigma} \right]^{1/(1-\sigma)}$$

The price index in a region is the lower, the higher is the percentage of own goods as a fraction of all goods produced in the economy. Thus, the price index for intermediate inputs is always lower in the core than in the periphery.

Marginal costs depend on the weighted average of wages and the price index for intermediate goods:

(2.9) $$MC_c = w_c^{1-\mu}\, T_c^{\mu} (1-\mu)^{\mu-1}\, \mu^{-\mu}\, g\, b.$$

The number of firms and different goods produced in a region can be expressed as:

(2.10) $$N_c = \frac{L_c}{a\sigma} \left[\frac{\mu}{1-\mu} \frac{w_c}{T_c} \right]^{\mu}.$$

In order to solve for the static general equilibrium of the economy, expressions for total income and sectoral wages have to be found. The agricultural sector produces with constant returns to scale. Labor in the form of farmers is the only factor of production. By the choice of adequate units marginal product and wages can be normalized to one. Total income in the two regions is also normalized to one, so that income in the agricultural sector equals its labor share, $1-\pi$. Since land is equally distributed between the regions, and transport costs for agricultural products are zero, the amount of farmers and, consequently, total farmers income equals $\frac{1-\pi}{2}$ per region. Total employment in the industrial sector is π and consists of core workers (L_c) and periphery workers (L_p), where the region with the larger amount of workers is called the core. The number of workers of both regions also equals the share of income that is spent on industrial goods:

$$(2.11) \qquad L_c + L_p = \pi = (\varepsilon_c)y_c + (\varepsilon_p)y_p.$$

This condition assures equality on the market for industrial goods. Equality on the market for agricultural goods is following Walras Law .

Farmers can only work on farms of their original region, since land in the other region is occupied by other farmers already. However, I relax a standard

assumption of most economic geography models that farmers are immobile between sectors as well. Instead, I assume that they may switch sectors if total demand for agricultural products is not high enough to earn the normalized wage of one. This happens in the course of economic development, because of the higher income elasticity of demand for industrial goods. With increasing real per capita income the number of industrial workers increases until demand equals supply of agricultural products again. This leads to a change of the production structure towards industrial goods.

Workers in the industrial sector are immobile intersectorally, but mobile interregionally. They migrate to the region in which they can realize higher real wages. To complete the general equilibrium of the economy and to derive an expression for the industrial wage rate, a few other equations have to be set up. Total income (Y) in a region consists of workers and farmers income:

$$(2.12) \qquad Y_c = \left(w_c L_c + \left(\frac{1-\pi}{2} \right) \right)$$

Total expenditure on industrial goods by consumers and firms in the core (X_c) equals the share ε of the regions income plus the expenditure on intermediate goods ($M_j T_c$). Using equation (2.7), expenditure on intermediate goods can be expressed in terms of the sum of wages such that :

(2.13) $$X_c = \varepsilon_c Y_c + \frac{\mu}{1-\mu} w_c L_c .$$

Using equation (2.13), Junius (1996) shows that total revenue of sales of industrial goods of the core can be expressed as:

(2.14) $$S_c = \frac{N_c}{N_c - N_p}\left(\frac{\sigma}{\sigma-1}\right)^{1-\sigma}\left(X_c\left(\frac{T_c}{MC_c}\right)^{\sigma-1} + X_p\left(\frac{T_p}{\tau MC_c}\right)^{\sigma-1}\right).$$

Revenue times the share of labor in production equals the sum of wages:

(2.15) $$(1-\mu)S_c = w_c L_c ,$$

from which the nominal wage rate can be derived as:

(2.16) $$w_c = \frac{(1-\mu)N_c}{L_c(N_c+N_p)}\left(\frac{\sigma}{\sigma-1}\right)^{1-\sigma}\left[X_c\left(\frac{T_c}{MC_c}\right) + X_p\left(\frac{T_p}{\tau\, MC_c}\right)^{\sigma-1}\right].$$

Real wages, ω_c are calculated as:

(2.17) $$\omega_c = w_c / T_c^{\varepsilon}$$

Similarly, real per capita income is:

(2.18) $$capy_c = Y_c / T_c^{\varepsilon}\left(L_c + (1-\pi)/2\right).$$

Solving equations (2.8) - (2.13) and (2.16) - (2.18) simultaneously for both regions determines price indices, number of firms, income, sales and wages per region. Since all possible profits are distributed through wages, the relative wage of the two regions indicates where pecuniary externalities resulting from linkage and home market effects are higher. Higher wages in the core than in the periphery set an incentive for peripheral workers to migrate to the core. That is, the relative wage indicates the relative strength of centripetal and centrifugal forces. Centripetal forces outweigh centrifugal forces if core wages are higher than peripheral wages. In the next section, I will solve the model and determine under what conditions centripetal forces prevail.

4. The Mechanics of the Model

In order to solve the model for the endogenous parameters, the exogenous parameters have to be predetermined. These are $\mu, \pi, \sigma, \phi, A_s, f$, which are standard parameters in economic geography models. Their impact is summarized in Table 3.[6]

---

6 Explicit analytical (corner) solutions for the impact of the exogenous parameters can be found in Krugman (1991, 1992). Numerical solutions to variations of these parameters can be found in Junius (1996).

Table 2 — The Mechanics of the Model

Parameter		Effect of a rise of the parameter / variable	Effects of economic development on parameter / variable	Economic development strengthens centripetal / centrifugal forces
intermediate goods in total inputs	μ	centripetal	—	—
share of workers = total expenditure on industrial goods	π	centrifugal	down	centripetal
elasticity of substitution	σ	centrifugal	—	—
marginal propensity to spend on industrial goods	ϕ	centripetal	—	—
subsistence level of agricultural goods	As	centrifugal	—	—
congestion / pollution	f	centrifugal	up	centrifugal

The share of intermediate goods in total inputs (μ) indicates the importance of backward and forward linkages between firms. The higher the share, the more important are linkages effect, which benefit core firms most. Similarly, a high share of consumers' expenditure on industrial goods (π) strengthens the core because it produces the bulk of industrial goods. The elasticity of substitution (σ) is an inverse index of internal economies of scale. A high elasticity of substitution implies low scale economies and, therefore, low centripetal forces. The marginal propensity to spend on industrial goods (ϕ) indicates high centripetal forces since it indicates a low importance of the

transport costs it is profitable for firms to locate close to the peripheral demand in order to save on transport costs. The lower transport costs are, the less important it is to be close to peripheral demand. Proximity to farmers' final demand is less important because consumers can be served relatively cheaply from both regions. Instead, for low transport costs, production cost differences are getting more important. These are influenced by linkage effects. With more firms in the core, these positive pecuniary externalities reduce the costs of production relatively more in the core than in the periphery, such that for intermediate levels of transport costs the relative wage is higher in the core.

Figure 1 — Relative Wage for Alternative Levels of Trade Costs

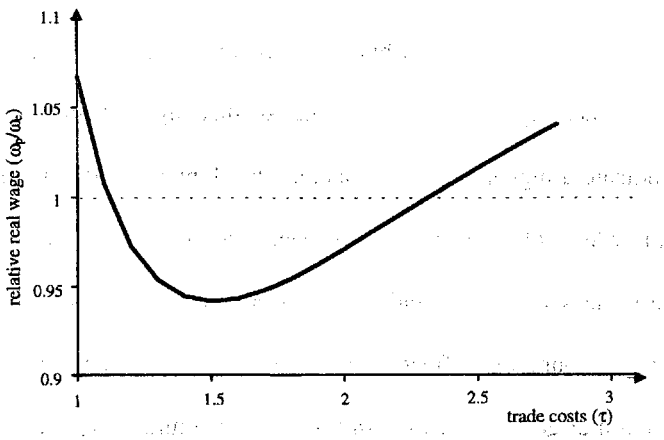

(As =0.7, a = 0.25, β = 0.25, f = 0.045, μ = 0.2, σ = 6.0, v = 0.7, time = 16)

However, for zero transport costs, indicated by *tau* = 1, intermediate input costs are the same in the periphery and in the core. Also, no transport costs have to be paid for the distribution of final goods. Nevertheless, real wages are not the same in both regions. Congestion effects ensure that production costs are higher in the core, which translates into higher real wages in the periphery for low transport cost.

The impact of economic development for various initial industry distributions

Figure 2 shows the effects of economic development on the real wage ratio. The ratio shows a U-shaped pattern, which is drawn for various initial industry distributions, indicated by the percentage of industries in the core, v. $v = 1$ implies complete concentration while $v = 0.5$ implies equal distribution of industries. Productivity increases over time, so that higher values of *time* in Figure 2 indicate a higher level of economic development and real per capita GDP. At a low level of economic development, say time = 0, relative wages are more or less the same for all industry distributions because of low linkage effects and low congestion effects. The higher income elasticity of industrial versus agricultural goods induces a shift from agricultural production towards

industrial production.[7] [8] Figure 2 shows that in the relative wage of the periphery declines because a larger size of the industrial sector increases linkage effects which benefit the core. The core benefits the more, the more unequal the two regions are initially, indicated by a higher v. Thus, the higher v, the stronger are centripetal forces and the larger is the area below the dotted horizontal line at 1 for which concentration results.

However, after a certain point the relative wage of the periphery rises again, indicating stronger centrifugal forces. This results because further economic development increases the overall amount of economic activity and,

---

7 For instance, for the parameter values used in the calculations of Figure 1 and 2 the agricultural share in GDP declines from 69.7 percent at time = 0, to 47.1 percent at time = 10 to 35.5 percent at time = 22.

8 Since industrial production takes place in cities, higher levels of development mean higher levels of urbanization. However, urbanization does not imply concentration, because each city can be a site of industrial production. In the model economy the number of possible sites is reduced to two, the core and the periphery. If urbanization increases the relative number of firms of the core, it also increases concentration. If urbanization increases the relative number of firms of the periphery, it decreases concentration. In the first case urbanization strengthens centripetal forces, in the second case it strengthens centrifugal forces.

Figure 2 — Relative Wage in the Course of Economic Development for Alternative Industry Distributions

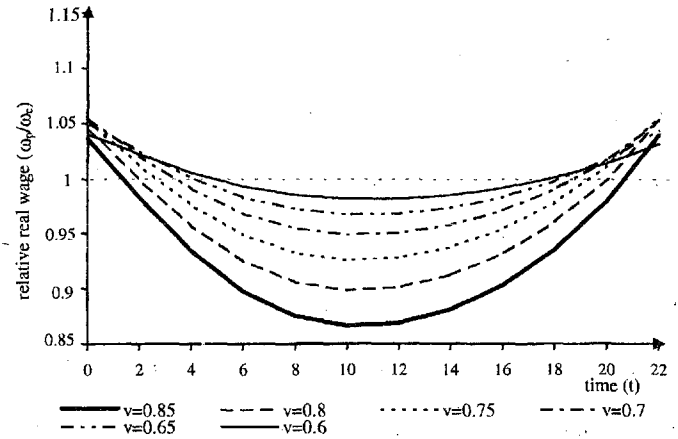

(As = 0.7, a = 0.25, β = 0.25, f = 0.045, μ = 0.2, σ = 6.0, τ = 2.0)

consequently, also congestion effects. This leads to higher costs of production. With congestion being more prone in the core than in the periphery, congestion effects increase costs relatively more in the core than in the periphery. The relative strength of centrifugal forces rises and raises the relative wage of the periphery. For high levels of economic development, the advantage of stronger linkage effects in the core is increasingly counterbalanced by congestion effects. These are more severe in the core than in the periphery so that the wage ratios for the different v-curves converge again.

The results do not depend on the neglect of income in determining the effects of congestion. Including a term that captures the effect that higher real income increases the sensitivity towards congestion and pollution and, thereby, leads to higher costs, does not change the qualitative results, presented in this section. To summarize, centrifugal forces dominate for low and high levels of economic development as indicated by the wage ratio. Thus, the model suggests a U-shaped relationship of economic development and the relative strength of centrifugal and centripetal forces. Therefore, industrial concentration follows the shape of an inverted U in the course of economic development, where centripetal forces are predicted to dominate for intermediate levels of economic development.

The inverted U is more pronounced for more unequal initial industry distributions. This results from the effects that at low development stages linkage and home market effects are the dominant determinants of industry location, and at high development stages congestion effects matter increasingly. Therefore, a region first benefits the more, the larger it is and later it suffers from higher congestion effects, the larger it is. Without congestion effects cumulative causation would suggest that economies depending on the equal initial industry distributions converge to more equal industry distributions or

diverge to complete concentration. Consequently, the shift of the relative importance of linkage and congestion effects in the course of economic development prevents the lock-in of the pattern of industry distribution.

Simultaneous changes of parameters

Considering that transport costs may fall in the course of economic development, it is important to check whether the effects of a change in the parameters cancel each other out or reinforce each other. A simultaneous change of the two variables is shown in the surface plot of Figure 3a and the corresponding contour plot of Figure 3b. Starting at the lower right corner of Figure 3a, declining transport costs (*tau*) and increasing economic development (*time*) first lowers the relative wage of the periphery, i.e. the relative wage of the core rises. However, high levels of economic development and low levels of transport costs again lead to higher relative wages of the periphery. The contour plot highlights the simultaneous change of the two variables from a different perspective. It shows combinations of *tau* and *time* that yield the same relative wages. The different shades of the diagram indicate different heights of the isolines, with darker areas for lower relative wages. The figure shows that the two variables reinforce each other such that a simultaneous change also leads to

Figure 3 — Simultaneous Variation of Transport Costs (tau) and the Level of Economic Development (time):

3a) Surface Plot

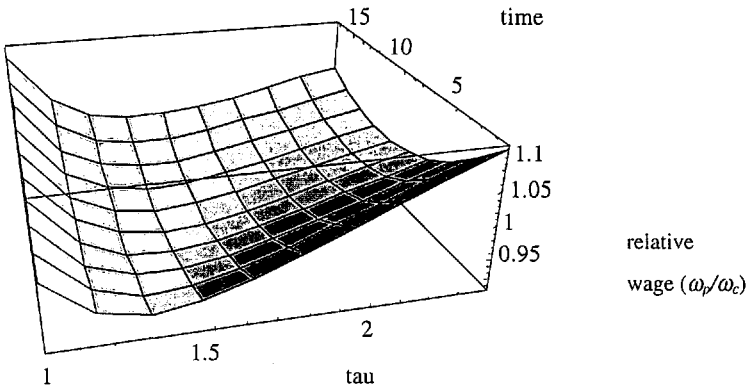

3b) Contour Plot

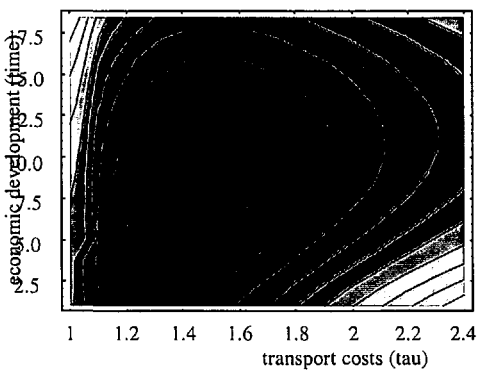

an inverted U-curve pattern of concentration, where centripetal forces are highest for intermediate values of transport costs and economic development.

5. Industrial concentration in developing and European countries

The model of the previous section predicts that centripetal forces are highest at intermediate stages of economic development. This explains the inverted U-shaped relationship of economic development and concentration of economic activities as observed by Williamson (1965) and Wheaton and Shishido (1981). The model is also able to explain why industry patterns are more equally distributed in most European countries than in most developing countries (DCs). It is the combination of higher transport costs and a more equal distribution of industries at the beginning of the industrialization that favored a more balanced pattern of industry distribution in Europe.

European industrialization took place during a time when transport costs where significantly higher than during the time when DCs industrialization took place (Mokyr, 1990). During the industrialization of Europe, productivity rose, transport costs fell and some industry concentration indeed took place. For instance, the Ruhr area, Manchester and Silesia attracted other industries that did not draw on the advantageous initial endowments of these areas, but on the agglomeration economies of a lot of diverse firms. The slow pace of

industrialization ensured that no big push could establish a particular industrial center.

Before the industrial revolution in Europe in the 19th century the urban population was relatively equally dispersed (Bairoch et al. 1988). Some industrial or manufacturing production had been established at several places already. Locally dispersed resources ensured that production was dispersed. One could find, for instance, high skilled glass production in Bavaria, Bohemia and Lorraine, which were surely not the major agglomerations of their countries. Other production took place equally dispersed according to natural deposits or traditional skill advantages. Skilled labor was not only found in the capital, but was distributed according to traditional manufacturing production. This means that initial conditions at the outset of the industrial revolution did not extremely favor any particular region. Home market effects might have favored the major agglomerations of that time. However, none of the European capitals like Amsterdam, Brussels, Berlin or Paris became a major center of modern industry (Mokyr, 1995).[9]

---

9 See also Pollard (1981) for an extensive description of the European industrial revolution. Williamson (1995) provides an overview of some stylized facts and alternative explanations on the relationship of industrialization and urbanization in developed and developing countries.

The conditions in today's DCs are considerably different. First, industrialization takes place later under low transport costs, which favor concentrated production. Second, the initial distribution of production was less dispersed.[10] Many of today's DCs were immigrant countries at the time of their first industrialization. The native and rural population was poorly skilled compared to the immigrants. This means that human capital was concentrated where immigrants arrived. This was almost always the major harbor like Buenos Aires or Rio de Janeiro. In the former European colonies, a similar process occurred. In these countries, skill levels and formal education were very unequally distributed. Relevant technologies of production were adopted from the colonial countries. For administrative as well as safety reasons, skilled immigrants and colonial administratives concentrated in the capital. This prevented the spread of their knowledge and favored concentrated production.

Concluding, one can say that the conditions at the outset of the European industrialization would be associated with the lower right corner of Figure 4b, i.e. high transport costs and relatively equal distribution of industries. The upper center of Figure 4b would indicate conditions at the outset of developing countries industrialization. As the Figure suggests, high transport costs and

---

10 See Bairoch (1988, pp. 436-440) and United Nations (1995).

relatively equal initial industry distributions lead to stronger centrifugal forces and, thus, favored the development of a more balanced distribution of industries in European countries versus developing countries.[11]

---

11 Some further factors that may lead to differences in the concentration of economic activities across countries should be mentioned at this place. These are resource endowments or central locations that favor industrial production in a certain part of a country. Also political factors matter. Ades and Glaeser (1995) find that dictatorships and politically unstable systems lead to larger central cities than democratic and stable systems. Dictatorships tend to exploit the hinterland. They concentrate investment and consumption expenditures as well as public services on the central city, because of the need to control closely as much as possible of the country. Henderson (1986) and Wheaton and Shishido (1981) show that the concentration of government expenditure, and non-federalist political systems favor concentration in the primate city or district. Also, the external trade regime is found to have an impact on the internal distribution of industries. As suggested by Krugman and Livas (1996), Ades and Glaeser (1995) find that high costs of external trade lead to industrial concentration and larger primate cities than low trade costs. Above this, urbanization seems to be a precondition for concentration. This could explain, for instance, why in ancient Rome a mere 2 percent of the empires' population lived in Rome itself, whereas today 36 percent of Argentina's population lives in Buenos Aires.

Figure 4 — Simultaneous Variation of Transport Costs (tau) and the Relative Initial Distribution of Industries (v): (As = 0.7, a = 0.25, β = 0.25, f = 0.045, μ = 0.2, σ = 6.0, time = 16.0)

Figure 4a- Surface Plot

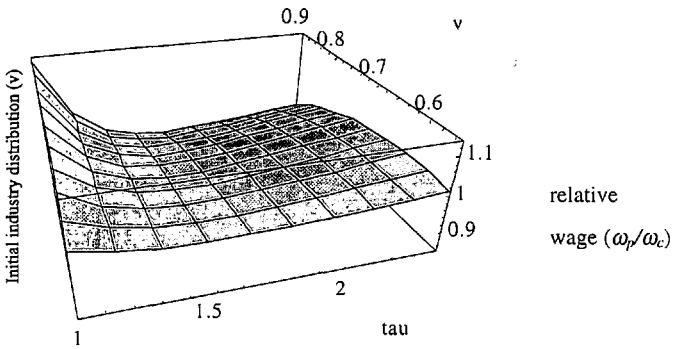

4b) Contour Plot

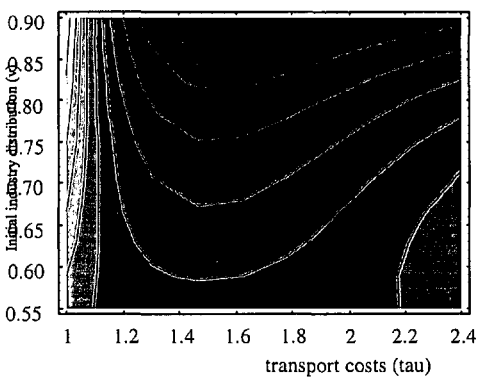

6. Summary

In this paper, I set up an economic geography model to explain industrial location patterns for two trading regions. The model suggests that home market effects and forward and backward linkages lead to external economies of scale. The demand of a dispersed immobile part of the population and congestion effects work against these centripetal forces. As in other economic geography models, centrifugal forces prevail for high transport costs and centripetal forces prevail for intermediate transport costs. For low transport costs, congestion effects raise production costs in the core relatively more than in the periphery such that centrifugal forces prevail.

The effects of economic development are diverse. Initially, economic development strengthens centripetal forces and, consequently, the advantages of being in the larger region. In later development stages, increased congestion sensitivities and higher absolute levels of congestion matter. They lead to a shift of industries to the periphery.

Lower levels of transport costs and more unequal initial population distributions at the outset of the first industrialization may explain why industry concentration is much higher in developing countries than in developed countries. Further economic development in today's DCs will also raise

congestion problems. If so, the model suggests that industrial production will eventually disperse. That is, congestion effects limit the usual cumulative causation effects and prevent the lock-in of industrial production in one region.

References

Ades, A. and E. Glaeser (1995). *Trade and Circuses: Explaining Urban Giants*. Quarterly Journal of Economics, 110 (1): 195-227.

Alonso, W. (1964). *Location and Land Use*. Cambridge.

Bairoch, P. (1988). *Cities and Economic Development: From the Dawn of History to the Present*. University of Chicago Press, Chicago.

Bairoch, P., J. Batou, and P. Chèvre (1988). *The Population of European Cities: Data Bank and Short Summary of Results*. Geneva.

Brakman, S., H. Garretsen, R. Gigengack, C. van Marrewijk, and R. Wagenvoort (1993). *Congestion and Industrial Location. Research Memorandum 554*. University of Groningen, Institute of Economic Research.

Brezis, E. and P. Krugman (1993). *Technology and the life Cycle of Cities*. NBER Working Paper, 4561.

Carroll, G. (1982). *National City-Size Distributions: What do we know after 67 Years of Research?*. Progress in Human Geography, 6 (1): 1-43.

Dixit, A. and J. Stiglitz (1977). *Monopolistic Competition and Optimum Product Diversity*. American Economic Review, 67: 297–308.

Fujita, M. and P. Krugman (1995). *When is the Economy Monocentric?: von Thünen und Chamberlin Unified*. Regional Science and Urban Economics, 25: 505-528.

Fujita, M. and J.-F. Thisse (1996). *Economics of Agglomeration*. CEPR Discussion Paper Series, 1344.

Grossman, G. (1995). *Pollution and Growth: What do we know?* The Economics of Sustainable Development, Cambridge, pp. 19-46.

Grossman, G., A. Krueger, and J. Laity (1994). *Determinants of Air Pollution in US Countries*. Discussion Paper, 169, Princeton University.

Grossman, G. and A. Krueger (1995). *Economic Growth and the Environment*. Quarterly Journal of Economics, pp. 354-377.

Henderson, J.V. (1986). *Economic Theory and the Cities*. Academic Press.

Junius, K. (1996). *Limits to Industrial Agglomeration*. Kiel Working Paper, 762. Institute of World Economics, Kiel.

Kim, S. (1995). *Expansion of Markets and the Geographic Distribution of Economic Activities: The Trends in U.S. Regional Manufacturing Structure, 1860-1987*. Quarterly Journal of Economics, 110: 881-908.

Krugman, P. (1980). *Scale Economies, Product Differentiation and Pattern of Trade*. American Economic Review, 70: 950-959.

Krugman, P. (1991). *Increasing Returns and Economic Geography*. Journal of Political Economy, 99: 483–499.

Krugman, P. (1992). *A Dynamic Spatial Model*, NBER Working Papers, 4219.

Krugman, P. (1993). *On the Number and Location of Cities*. European Economic Review, 37: 293-298.

Krugman, P. and R. Livas Elizondo (1996). *Trade Policy and the Third World Metropolis*. Journal of Development Economics, 49: 137-150.

Krugman, P. and A.J. Venables (1995). *Globalization and the Inequality of Nations*. Quarterly Journal of Economics, 110 (4): 560-587.

Krugman, P. and A.J. Venables (1996). *Integration, Specialization and Adjustment*. Nun im European Economic Review, 40: 959-968.

Markusen, A. (1994). *The Interaction between Regional and Industrial Policies; Evidence from Korea, Brazil, Japan and the US*. Paper prepared for the World Bank's Annual Conference on Development Economics 1994.

Mokyr, J. (1990). *The Lever of Riches: Technological creativity and Economic Progress*. New York. Oxford University Press.

Mokyr, J. (1995). *Urbanization, Technological Progress and Economic History*. In: H. Giersch (ed.), Urban Agglomeration and Economic Growth, Springer.

Muth, R. (1969). *Cities and Housing*. Chicago.

OECD (1991). *The State of the Environment*. Paris.

Pollard, S. (1981). *Peaceful Conquest: The Industrialization of Europe 1760-1970*. Oxford University Press.

Puga, D. (1994). *Regional Integration and The Dynamic of Urbanisation*. Center of Economic Performance Discussion Papers, 212.

Puga, D. and A. Venables (1996). *The Spread of Industry: Spatial Agglomeration in Economic Development*. CEPR Discussion Paper Series, 1354.

Selden, T. and D. Song (1994). *Environmental Quality and Development: Is there a Kuznets Curve for Air Pollution Emissions?* Journal of Environmental Economies and Management, 27 (2): 147-162.

Stern, D., M. Common, and E. Barbier (1996). *Economic Growth and Environmental Degradation: The Environmental Kuznets Curve and Sustainable Development*. World Development, 24 (7): 1151-1160.

Syrquin, M. (1989). *Patterns of Structural Change*. In: H. Chenery and T. Srinivasan (eds.), Handbook of Development Economics, 1, Amsterdam.

Tolley G. and V. Thomas (1987). *The Economics of Urbanization and Urban Policies in Developing Countries*. World Bank, Washington, D.C.

United Nations (1995). *World Urbanization Prospects: The 1994 Revision*. New York.

Venables, A. (1996). *Equilibrium Locations of Vertically Linked Industries*. International Economic Review, 37 (2): 341–360.

Weber, A. (1909). *Standort der Industrien*. Mohr, Tübingen.

Wheaton, W. and H. Shishido (1981). *Urban Concentration, Agglomeration Economics and the Level of Economic Development*. Economic Development and Cultural Change, 50:17-30.

Williamson, J.G. (1965). *Regional Inequality and the Process of National Development: A Description of the Patterns*. Economic Development and Cultural Change, 13 (4), Part II: 3-84.

Williamson, J.G. (1995). *Migration and City Growth during Industrial Revolutions*. In: H. Giersch (ed.), Urban Agglomeration and Economic Growth, Springer.

World Bank (1992). *Word Development Report 1992: Development and the Environment*. Oxford University Press.

World Bank (1994). *World Development Report 1994: Infra-structure and Development*. Oxford University Press.

World Bank (1996). *World Development Report 1996. From Plan to Market.* Oxford University Press.