ECONSTOR
Make Your Publications Visible.

A Service of
ZBW
Leibniz-Informationszentrum Wirtschaft
Leibniz Information Centre for Economics

Whittington, Jan; Dowall, David E.

Working Paper

Transaction-cost economic analysis of institutional change toward design-build contracts for public transportation

Working Paper, No. 2006,09

Provided in Cooperation with:
University of California Berkeley, Institute of Urban and Regional Development (IURD)

Suggested Citation: Whittington, Jan; Dowall, David E. (2006) : Transaction-cost economic analysis of institutional change toward design-build contracts for public transportation, Working Paper, No. 2006,09, University of California, Institute of Urban and Regional Development (IURD), Berkeley, CA

This Version is available at:
https://hdl.handle.net/10419/39260

Standard-Nutzungsbedingungen:

Die Dokumente auf EconStor dürfen zu eigenen wissenschaftlichen Zwecken und zum Privatgebrauch gespeichert und kopiert werden.

Sie dürfen die Dokumente nicht für öffentliche oder kommerzielle Zwecke vervielfältigen, öffentlich ausstellen, öffentlich zugänglich machen, vertreiben oder anderweitig nutzen.

Sofern die Verfasser die Dokumente unter Open-Content-Lizenzen (insbesondere CC-Lizenzen) zur Verfügung gestellt haben sollten, gelten abweichend von diesen Nutzungsbedingungen die in der dort genannten Lizenz gewährten Nutzungsrechte.

Terms of use:

Documents in EconStor may be saved and copied for your personal and scholarly purposes.

You are not to copy documents for public or commercial purposes, to exhibit the documents publicly, to make them publicly available on the internet, or to distribute or otherwise use the documents in public.

If the documents have been made available under an Open Content Licence (especially Creative Commons Licences), you may exercise further usage rights as specified in the indicated licence.

WWW.ECONSTOR.EU

Mitglied der Leibniz-Gemeinschaft

Institute of Urban & Regional Development
IURD Working Paper Series
(University of California, Berkeley)

Year 2006 *Paper WP*-2006-09

Transaction-Cost Economic Analysis of Institutional Change toward Design-Build Contracts for Public Transportation

Jan Whittington * David E. Dowall †

*

†Department of City & Regional Planning, University of California, Berkeley

This paper is posted at the eScholarship Repository, University of California.
http://repositories.cdlib.org/iurd/wps/WP-2006-09
Copyright ©2006 by the authors.

Transaction-Cost Economic Analysis of Institutional Change toward Design-Build Contracts for Public Transportation

Abstract

This research is a transaction-cost economic analysis of recently completed transportation projects, informing a comparative evaluation of the institutional change in public contracting from design–bid–build to design–build project delivery. Design–build, in which design and construction services are bundled together, is an alternative form of public contract recently adopted by transportation departments in more than 30 states. With this method, timely delivery arises from compact funding allocations and concurrent engineering. Such savings, however, may come at the expense of organized labor and environmental review, and could reflect higher transaction costs than traditional methods. At issue is the question of whether California 's Department of Transportation should also engage in design–build contracting.

Working Paper 2006-09

Transaction-Cost Economic Analysis of Institutional Change toward Design–Build Contracts for Public Transportation

Jan Whittington and David Dowall

This work was funded by a
University of California Transportation Center 2004–2005 research grant.

Institute of Urban and Regional Development
University of California at Berkeley

Table of Contents

Abstract 5
Overview of the Research 7
The Institutional Turn in Economics 9
    Finding Inefficiency: Studies of the Institutional Environment 10
    Finding Efficiency: Transaction Cost Economics 11
Testing Transaction Cost Economics 13
    Comparing Costs 13
    Describing the Transaction 14
    Discovering the Institutional Context 15
Analyzing Transportation Project Delivery 16
The States, the Programs, and the Projects 18
Two Comparable Projects 19
Comparing Costs 22
Two Projects: The Transaction, the Source of Costs 23
    Question One: The Gap between Estimates and Bids 25
    Question Two: The Gap between Bid Price and Construction Cost 27
    Question Three: The Sum of Transaction and Production Costs 27
Washington's Institutional Context for Design–Build 30
Comparing Schedules: Explaining Design–Build's Success 33
The Question of Impacts to Labor Organization 36
Environmental Compliance: Permitting, Review and Monitoring 38
Key Findings and Recommendations 41
Author's Note 43
References 44

Transaction-Cost Economic Analysis of Institutional Change toward Design–Build Contracts for Public Transportation

Jan Whittington and David Dowall

Abstract

This research is a transaction-cost economic analysis of recently completed transportation projects, informing a comparative evaluation of the institutional change in public contracting from design–bid–build to design–build project delivery. Design–build, in which design and construction services are bundled together, is an alternative form of public contract recently adopted by transportation departments in more than 30 states. With this method, timely delivery arises from compact funding allocations and concurrent engineering. Such savings, however, may come at the expense of organized labor and environmental review, and could reflect higher transaction costs than traditional methods. At issue is the question of whether California's Department of Transportation should also engage in design–build contracting.

Transaction-Cost Economic Analysis of Institutional Change toward Design–Build Contracts for Public Transportation

Jan Whittington and David Dowall

Overview of the Research

Design–build is a relatively new form of public contracting in the United States, and one that has been accelerated by federal programs in surface transportation. Design–build, in which one contract bundles together design and construction services, is an alternative to traditional contracting techniques, which separate these bids.

Since 1990, the Federal Highway Administration (FHWA) has advanced two experimental programs to promote, guide, and evaluate the use of design–build. By the end of 2002, the first of these programs (Special Experimental Project Number 14, or SEP-14) amassed 140 completed design–build projects across 24 states (plus the District of Columbia), at a total cost of $5.5 billion (SAIC 2006). The second (Special Experimental Project Number 15, or SEP-15), is aimed primarily at public–private partnerships, of which, design–build is an integral part. Today, 31 state departments of transportation use this form of contract, many in pilot programs or for contracts of limited purpose (Nossaman 2006). California is not among them.

While growing in popularity, this seemingly innocuous, small-scale form of privatization is controversial. Highly organized groups strive to promote and prevent the practice from state to state, each marshalling resources to generate reports of success and failure. Promoters of design–build suggest that close interaction between designers and constructors enables value engineering and reductions to cost and schedule. Promoters often represent firms interested in expanding the private sector market for highway engineering, while detractors represent unions of public sector engineers.

The arguments for and against design–build are as varied and complex as the projects themselves, and very few arguments are supported by empirical tests. Systemic problems with cost estimating in the transportation sector (Flyvbjerg 2002) limit valid research designs to the comparison of outcomes from projects delivered one way or another. Objective measures are difficult to develop or rarely utilized, owing in part to the political nature of contracting, but also to the implicitly neoclassical economic approach common in the literature of project delivery—an approach focused on the cost of production (payments to private

construction firms), when delivery is actually a service, requiring extensive support to develop and execute the contract (the job of public agencies and their consultants, which we will call transaction costs). Production costs and schedules are easy to find and compare; public expenditures are usually not included, and rarely exhaustive. As a result, research has not coalesced on a proven methodology for determining cost-effectiveness (Warne 2003).

This study uses institutional economics to shed light on many of the issues plaguing the evaluation of design–build contracting, for the purpose of assisting lawmakers in the State of California as they contemplate the adoption of enabling legislation. In institutional economic terms, design–build involves the switch from public to private ordering of design services such that the design firm, which used to serve as the public client's advocate during construction, is instead at the service of a general contractor or constructor. California is relatively rich in institutions supporting union agreements and environmental protection. In the transition to design–build, dramatic changes to procedures, roles, and responsibilities ensue, which may include impacts to organized labor. Existing research suggests that design–build shortens delivery schedules by allowing construction to begin before design is complete, but the benefits of shortened schedules may come at the expense of public participation if design information presented during environmental review is inadequate.

Should California use design–build? Picture a planner responsible for deciding whether a stretch of highway should be developed with design–build or design–bid–build procedures. Which process is more efficient? If design–build is more efficient, do such gains come at the expense of organized labor and environmental review? These questions were addressed through a transaction-cost economic analysis of recently completed design–bid–build and design–build projects, with attention to variations in the institutions governing transportation delivery from state to state.

This report begins with an introduction to the theory and application of institutional economics, especially transaction costs. Design–build contracting is then introduced, and the methodology of this study summarized. Results are presented next, focusing extensively on a pair of highway projects developed in the State of Washington. Results are divided into sections exploring the comparative cost, schedule, labor organization, and environmental compliance of design–build and design–bid–build projects. The report concludes with recommendations for policymakers.

The Institutional Turn in Economics

New institutional economics seeks to explain the creation, evolution, and economic performance of institutions and organizations as a framework for validating the formal logic of neoclassical economics. That is to say, institutional theorists continue to find the price mechanism valuable, though fallible and incomplete. The institutional turn in economics travels down two paths significant in explanatory power, methodological approach, and normative appeal, and both trajectories leave the bulk of neoclassical assumptions behind.

Neoclassical theory holds to Adam Smith's (1937 [1789]) portrayal of the economic activities of man as led by an "invisible hand." Individuals, following their own interests, are governed in their choices by a system of prices. With a stable set of preferences, individuals operate on those preferences to leverage technology with capital and labor in a virtuous cycle of productive growth—growth captured at the margin. The price mechanism presents perfect information for rational decision-making toward increasingly efficient exchange. One need only compare the purchase price for a given product; selection of the lowest price reflects the greatest gain.

The elegance of the price mechanism spawned acclaimed literature (Hayek 1944, Friedman 1962, Stigler 1971) and fueled an ideological pursuit of free markets that spanned the globe. However, neoclassical theory could not explain the existence of firms or externalities (as in the impacts to third parties from economic exchange). Thus, Ronald Coase (1937, 1960) reasoned, there must be a cost to using the price mechanism. As he says, "prices have to be discovered. There are negotiations to be undertaken, contracts to be drawn up, inspections have to be made, arrangements have to be made to settle disputes, and so on. These costs have come to be known as transaction costs." (1993: 230)

New institutional economics is at once inspired by Coase's reference to the firm as an instrument for economizing on transaction costs, and at the same time, a wholesale restructuring of economic thought. Douglass North describes this institutional turn (2005). Atomistic actors—cogs in the machine of neoclassical theory—occupy the smallest of spaces in a new institutional world. Subject to bounded rationality (Simon 1945), humans are recognized for their cognitive and behavioral limitations. Preferences change. Uncertainty is everywhere, and though people act with intentionality, their actions may or may not meet society's needs, and either way, unintended consequences are always possible. Price is a reliable measure when the environment is static, markets are competitive (plenty of buyers and sellers), exchange is

impersonal, and transactions are supported by the simplest of contracts. Differences in these measures leave neoclassical ideas idle.

To lower the cost of transacting in an uncertain world, people have created elaborate scaffolds of informal norms, formal rules, and enforcement characteristics, understood to varying degrees for the economic, political and social order they provide (North 2005: 48). This is how institutions are defined; they are created to produce a desired outcome, they comprise the incentives that shape the choices people make, they determine who will have access to the decision-making process, and they are critical determinants of economic performance. This vast causative landscape makes economic performance—as with any measure of efficiency—a relative term. Formalism is replaced with comparative analysis. Clean models are swept away by dirty hands.

Models in new institutional economics rely on transaction costs to measure of the cost of exchange, to analyze the cost of economic organization, and to better understand sources of poor economic performance (North 2005: 59). As a unit of analysis, a transaction can describe any type of exchange, from barter between tribesmen, to purchase agreements between multinational manufacturers and their suppliers, to the voting records of Congress and its constituents. In analysis, it is important to distinguish between institutions (the rules of the game) and organizations (the players of the game). Research pursues patterns of interaction between individuals, organizations, and institutions; descriptive models give explanatory power to numerical estimations of efficiency.

Though attention is slowly turning toward the embeddedness of politics and economics in a social order (Granovetter 1985, Bendor and Swistak 2001), most of the literature examines either the institutional environment, especially property rights (see Barzel 1997), or the transaction cost economics of the firm (see Williamson and Masten 1999), The reasoning that compels research in these two lines of inquiry deserves explication.

Finding Inefficiency: Studies of the Institutional Environment

Studies of the institutional environment (North 1990, 2005) seek to explain why, in the face of centuries of Western expansion, economic inefficiency persists. In North's view, a theory of institutions covers property rights, the state, and ideology. His theory begins with several assumptions: secure and productive property rights are the key to economic growth (Hamilton, Jay, and Madison 2001 [1788]), technological developments are built upon prior accumulation of

knowledge (Rosenberg 1976, David 1975), and institutions shape market structures when transaction costs are positive (Coase 1960).

Large-scale enterprise and regulation have dramatically lowered the transaction cost of manipulating the political system (Chandler 1977, Goldberg 1976). While constituents may support political rivals or move to other states (Hirschman 1970), Polanyi's (1944) account of history demonstrates that inefficient forms of governance can persist by making use of ideology to economize on enforcement costs. Since inconsistencies must mount before individuals begin to alter their ideologies (Berger and Luckmann 1967, Kuhn 1970), institutions generally have a slow rate of change. The fall of the Soviet Union, however, reminds us that abrupt change can occur (North 2005). On the whole, institutions most likely change in a pattern of punctuated equilibrium (Eldredge and Gould 1972): slow, path-dependent incrementalism occasionally interrupted by abrupt and sweeping transformation.

Finding Efficiency: Transaction Cost Economics

Building from Coase's case for the origin of the firm, transaction cost economics (Williamson 1975, 1985, 1996) seeks to explain why, given our current state of economic organization, efficiency is obtained. The emergence of organization is based on behavioral assumptions of bounded rationality and opportunism. In a break from property rights literature, where emphasis lay with ex ante incentives, transaction cost economics studies ex post contracting. Inspired by Marshall's (1949 [1920]: 626) discussion of idiosyncratic employment, Oliver Williamson introduces asset specificity. In reference to Alchian (1950), economic order is thought to result from a process of sorting akin to natural selection.

Transaction cost economics is a theory of institutional design; consider Williamson's explanation of vertical integration. Bounded rationality suggests that actors are "intendedly rational, but only limitedly so." (Simon 1957: xxiv) Limited cognitive ability suggests that complex contracts cannot be made completely ex ante. When actors are opportunistic, uncertainty is constant, and contracts may not be exercised in good faith. Though competition could keep costs down, asset-specific transactions give initial winners competitive advantage. Investments in assets specific to a transaction (goods or knowledge unique to a given buyer and seller) create "lock-in" effects, such that repeated transactions reduce competition to a small-numbers game. Joined in bilateral monopoly, buyer and seller are situated for costly haggling whenever a proposal to adapt is made by the other party. Under these circumstances,

private ordering (arbitration, organization) arises out of a desire to avoid costly court ordering.

As actors are "intendedly" rational, Williamson assumes they recognize potential conflict in advance and devise governance structures that forestall or attenuate it. When exchanging assets specific to a transaction and engaging in exchange frequently or over long periods of time, buyers and sellers become joined in bilateral monopoly. Under these conditions, contractual safeguards (employment is one of many) are thought to reduce the cost of exchange. This is how institutional economics explains the origin of the firm. The result is an array of organizational forms aligned with variations in asset specificity (k) and transaction cost (Figure 1). Market and hierarchy are extreme forms, but others exist in between; multi-project or programmatic agreements, for example, are hybrid contracts. In theory, every conceivable contractual innovation occupies a place on this graph, with implications for transaction costs and economic organization.

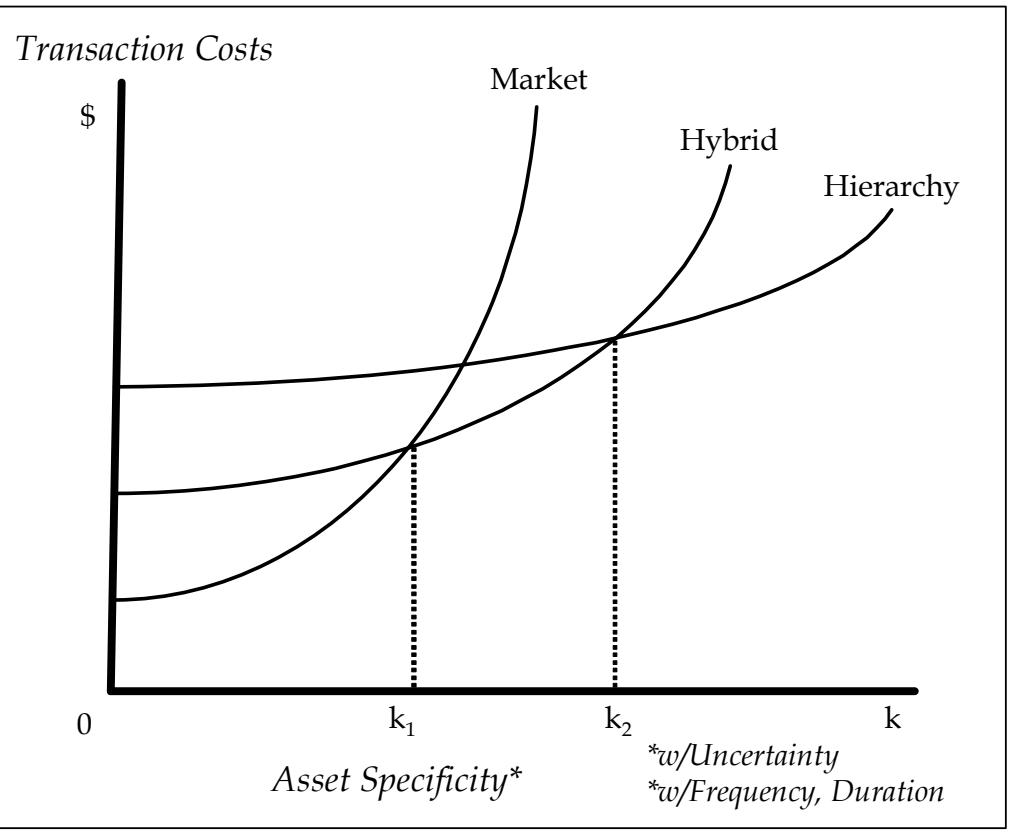

Figure 1: Oliver Williamson's heuristic model for transaction-cost economics (1996) suggests that economic organization (market, hybrid, hierarchy) is a function of transaction cost associated with asset specificity (k) in the presence of uncertainty, for frequent transactions or those that are lengthy in duration.

With the assumption that public bureaus are hierarchies offering contractual safeguards beyond those of the private firm, the logic of transaction cost economizing can be extended to public organization (Williamson 1999).

This study examines the public management of highway project delivery: a transaction often high in asset specificity, with contracts lengthy in duration, and considerable uncertainty during production.

Testing Transaction Cost Economics

Transaction cost economic theory is readied for empirical testing with the claim that there are different modes of governance (institutional and organizational arrangements), the costs of which differ in systematic ways, depending on the observable characteristics of the transaction in question (see Winter 1991: 186). Empirical research proceeds on a rather micro-level; comparing costs, describing transactions, and discovering the institutional context for transactions.

Comparing Costs

Williamson suggests that empirical tests examine the "comparative costs of planning, adapting, and monitoring task completion under alternative governance structures." (1985: 2) The simplest test comparatively measures the real costs of two institutional arrangements. Methods hold the nature of the good or service to be delivered constant, and measure economizing in reference to the sum of production and transaction costs, though the design of the good should also be part of the calculus, since design can influence cost and demand.

Empirical works are often characterized by the question of whether a given firm should make or buy an intermediate product (Shelanski and Klein 1995). In the private sector, however, the make-or-buy decision is usually Boolean (yes or no) and irreversible, so proxies have served in place of real costs (Furubotn and Richter 1991: 10-11).

The study of public decision-making is not so limited. Public entities try new arrangements in pilot programs. Oftentimes agencies manage old and new programs simultaneously. Thus the study of public programs can test the claim that institutional innovations serve transaction cost economizing purposes. This study controls for asset specificity and compares the cost of executing two forms of contract (old and new) to determine whether the new form lowers transaction costs.

Describing the Transaction

Costs are presumed to convey efficiency. Plenty of studies compare numbers; it is equally important to describe what differentiates comparative arrangements and to deduce, where possible, the sources of elevated cost or savings. Here, transaction cost reasoning steers attention toward qualitative research into the nature of the transaction, the relationship between partners to the exchange, and the terms of the contract.

To illustrate, I'll borrow from Douglass North (1981: 33-37). As he says, he makes juice from oranges he buys once a week from a grocer named Morris. There is no way to know, precisely, whether any grocer can provide the flavor or amount of juice he desires in an orange. Still, Valencia oranges make good juice, and such oranges can be purchased according to an objective system of number, weight, volume, or length, relying also on a greater structure of law and enforcement concerning property rights over oranges and dollars. There is the reputation Morris gains as a seller of oranges, because he forgoes the opportunity he has at each purchase to slip rotten oranges into the bag. Equally so, is the opportunity for Douglass to toss an extra orange in the bag while Morris is not looking. If they had to, they could go to court, at terrific expense, to settle differences about their exchange. But the competition created by numbers of buyers and sellers, and the personal nature of the exchange constrains both from behaving opportunistically. Suddenly, the purchase of a bag of oranges—indeed, a simple form of contract—is rendered in full.

This illustration is not comparative. However, the incentives that raise or lower costs as they deviate from this case are somewhat easy to imagine. Oranges are rather simple and easy to obtain: one can know with some certainty whether they are happy with the product, and there are many buyers and sellers competing in this market. As the assets of the seller (the goods, knowledge, brand, location, or timing they possess) become more specific to the needs of the buyer, competition fades away (Williamson, 1996: 105-106). Costs can rise. Information asymmetry between buyer and seller poses problems. Sunk costs raise the cost of exiting an agreement.

Adam Smith's celebrated observation—that self-interest in a competitive environment with a stable medium for impersonal exchange performs a social good—is the very reason why free markets are idealized. Impersonal exchange, however, is easily tainted by the knowledge buyers and sellers gain of one another. When the relationship between buyer and seller becomes personalized, costs change. Highly controlled tests of

game theoretic concepts suggest that cooperation in small groups appears to be innate and supported by repeated trials. In the real world, social good can be obtained by raising the payoff for cooperation and the punishment for non-cooperation (North 2005).

Payoff and punishment are institutional or contractual details which can support exchange, as when buyers and sellers try to protect against foreseeable hazards with contractual safeguards. As exchange becomes more complex, however, the contract it is based on becomes increasingly incomplete. Limits to human knowledge, the cost of information, the ever-present possibility of opportunistic behavior, and unintended consequences conspire against the goal of complete contracts. Persistent high costs associated with a given form of contract would suggest the need to search for alternative forms of organization.

Oranges lie at one end of a spectrum, and highways—like many forms of infrastructure—lie at the other end. Highways are not simple. They are not easy to obtain. Contracts between public agencies and private firms to deliver these goods are inevitably incomplete. Unforeseen consequences arise on a regular basis as contractors perform seemingly simple operations, like digging in the dirt. This study compares the payoffs and punishments associated with two forms of contract governing highway project delivery.

Discovering the Institutional Context

Transaction cost tests are comparative yet they assume that institutions are stable, and thus leave the researcher the challenge of controlling for institutional change. Since institutions are geographically and chronologically specific (indeed, details may differ between and within organizations) the subject matter to be compared should be carefully selected. This study controls for institutional change by analyzing pairs of projects governed by the same state department (often the same regional or district office), completed within three years of one another.

The institutional context reveals relationships between political structure and economic action (North 1990, Barzel 1997, Hirsch and Lounsbury 1996, Roberts and Greenwood 1997, Argyres and Liebeskind 1999). Central here are the path-dependent nature of rules and norms, how the rules and norms are enforced, the incentive structures of contracts, credible commitment to carry out the terms of contracts, and the shared mental models of economic and political actors, in addition to transaction costs (see Levy and Spiller 1994, Troesken 1999, 2001).

Critics of new institutional economics (Moe 1990, Perrow 1986) find politics clouded with values other than efficiency. Perhaps, then, the most fitting application of transaction cost analysis is in an area of public decision-making clearly known to strive for efficient outcomes. State agencies striving for more efficient highway project delivery have been trying out design–build contracts.

Analyzing Transportation Project Delivery

In the transportation sector, the traditional process of infrastructure delivery (design–bid–build) relies on sequential, separate public contracts for design and construction between state departments of transportation (DOT) and private firms. In recent years, many states have begun to contract out to one private entity (design–build) for both design and construction (Figure 2). This change in institutions—from two contracts into one—is a perfect test case for transaction costs economics.

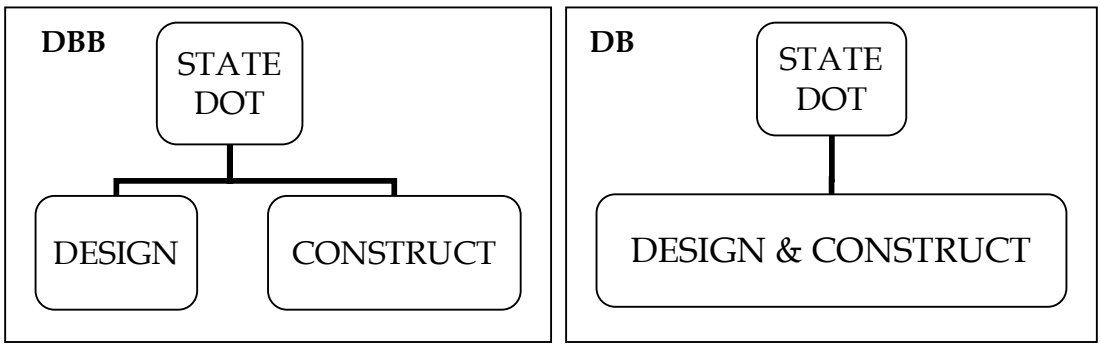

Figure 2: State Departments of Transportation are shifting the method of project delivery from a sequential process of contracting, known as design–bid–build (DBB), to one large contract for both design and construction, known as design–build (DB).

This study proceeded on three levels, with analysis of state institutions, programs, and projects. This was mixed methods research. Theoretical models of contracting under conditions of high asset specificity framed a protocol for case selection, semi-structured interviews, the review of archival records, and the collection of project-specific data. Everywhere the approach was to triangulate evidence from multiple sources, to maintain a chain of evidence in the service of establishing (or refuting) theoretical claims of cost, schedule, and labor or environmental compliance attributable to the type of contract.

States were selected for variations in approach and experience managing design–build highway projects, with attention to similarities with California in terms of institutional design for project delivery. Programs were researched historically, with reviews of regulations and policy debates supplemented by interviews with policymakers.

Projects were selected in pairs (one design–build, one design–bid–build) to control for extraneous variance associated with the scope, quality, location, timing of delivery, and public entity in the project management role. Comparability was ensured by the collection of measures of scale with strong relationships to project cost, including the area of footprint (a measure of land disturbance), the cubic mass of the structure, the surface area of bridge, the surface area of wall, and acreage of wetlands impacted.

Project-level data collection was served with templates recording basic project data, ex ante and ex post project costs (within and outside the transportation department), a list of environmental permits and documents, and the schedule of project development and contract execution. Interviews with project management validated data with descriptions of major events experienced during the course of project development.

On the project level, one of the central issues was how to define transaction cost. Though the concept is easy to envision, the definition of transaction cost in empirical research is somewhat ambiguous. In theory, production costs reflect prices on the private market while transaction costs comprise all the other costs required to conclude a transaction. For the construction industry, production costs would be based on the price of design (engineering) and construction, while transaction costs would be all the other costs, regardless of the organization responsible for each task. Furubotn and Richter (1991) refer, in this sense, to the cost of using an institution.

However, since the total amount paid to a private contractor is easily available, focus in the professional literature is on the cost of construction, including the cost of change orders and disputes in favor of the contractor. Design (engineering), when completed by the DOT, is often omitted. Analyses of cost overruns in the literature of public transportation, for example, compare DOT cost estimates to the price paid to the contractor for construction (Flyvbjerg et al. 2002). Transaction costs are absent.

To be consistent with the literature, this study measures production cost as the amount paid to the private sector for engineering, construction, change orders, and disputes (see Table 1). Transaction costs, the sum of all other costs, are primarily DOT expenses.

Definitions of Cost	In Theory	In Literature
Production Cost	*DOT Engineering*	Contractor Engineering
	Contractor Engineering	Construction (plus tax)
	Construction (plus tax)	*Change Orders & Disputes*
Transaction Cost	Preliminary Administration	Preliminary Administration
	Ancillary Studies	*DOT Engineering*
	Bid Administration	Ancillary Studies
	Contract Administration	Bid Administration
	Outside Agreements & Damages	Contract Administration
	Change Orders & Disputes	Outside Agreements & Damages

Table 1: Definitions of production cost and transaction cost for construction projects compared in transaction cost economic theory and the engineering and construction literature (though the professional literature rarely examines transaction costs). Emphasis is on DOT engineering, and change orders & disputes paid to the contractor. In theory, production costs should include DOT engineering. In the literature, production costs tend to focus on payments to contractors.

Government expenses can be difficult to acquire and tend to be omitted from analysis (Warne 2003), but they are critical components of transaction costs in public contracting. In many states, alternative contracts involve a shift of responsibility for design from the DOT to the construction contractor. To know whether one form of contract is more efficient than another, it is necessary to see the interplay of DOT and contractor expenses between the two forms of contract.

The States, the Programs, and the Projects

California's experiments with design–build are limited to toll roads (State Routes 91 and 125), and one locally-led development (in Orange County, still under construction). To find recently completed design–build projects required research out of state, but research sensitive to California's issues and institutions. The projects we found had to be similar in nature and management to those that could be undertaken in California and their outcomes had to resonate with the concerns of the California Department of Transportation (Caltrans) and Legislature.

For these reasons, much of this report is focused on one pair of projects from the State of Washington. Like California, the State of

Washington supports collective bargaining and has long recognized the rights of public engineers in the transportation sector. Environmental values and procedures are prominent in both states. Two interchange projects—one design–build, the other design–bid–build—were recently completed by Washington's Department of Transportation (WSDOT), on the same stretch of highway, about two miles apart from one another.

Where necessary, the analysis of Washington has been supplemented with data from other states, each known for their extensive or innovative use of design–build. Ohio is unique in its application of design–build to small scale projects using low-bid selection criteria. Florida has been using the design–build method longer than any other state. Each has completed more than 50 design–build projects. Texas and Oregon have made unique improvements to environmental review in the context of design–build contracting. Findings were also supported by a thorough review of the professional literature, as well as attendance to conferences on design–build in the transportation sector.

Two Comparable Projects

In 1998, the State of Washington began a pilot program which applied the design–build method to a highway interchange. The project is in the southwestern corner of the state at the intersection of State Route 500 and Thurston Way. Construction was completed in July 2003 (Figure 3).

In May 2005, construction was completed on a comparable interchange—very similar in scale and scope—administered by the same regional office, in close proximity to Thurston Way (Figure 4). Located at State Route 500 and 112th Street, this project was delivered using the traditional design–bid–build method.

Scale, scope and costs for the two projects are shown in Table 2. Four general measures indicate the scale and scope of intersection projects. The area of the footprint and mass of structure are general measures of scale. Bridges and walls are typically expensive elements of the scope of work, thus differences in size can skew costs. By these measures, 112th Street is a slightly larger project than Thurston Way, though they are comparable. Comparability in scale and scope are supported by cost estimates from WSDOT, which were quite similar.

Figure 3: Photo of Thurston Way Interchange after construction in the State of Washington.

Figure 4: Photo of 112th Street Interchange after construction in the State of Washington.

Scale, Scope and Cost	112th Street	Thurston Way	
Area of Footprint	1,614,587	1,334,784*	Square feet
Mass of Structure	290,435	220,000	Cubic yards
Surface Area of Bridge	35,564	19,620	Square feet
Area of Wall	121,500	54,697	Square feet
Percent Design Complete at Bid	100	30	Percent
DOT Cost Estimate at Bid	$17,768,795	$17,554,997	
Bid Price	$18,162,105	$22,725,000	
Total Cost	$27,752,482	$27,129,598	

Table 2: Basic measures of project scale, scope and cost compared for the 112th Street Interchange and Thurston Way Interchange projects in the State of Washington
* Author's estimates.

The percent of design completion at the time of bid represents the amount of design work finished by the DOT prior to soliciting bids for the construction contract. Here the separation between design–bid–build and design–build is clear. The traditional form of contract administration is sequential: designs for 112th Street were 100 percent complete before bids were solicited for construction. Designs for Thurston Way were 30 percent complete when bids were solicited from private firms to finish design and construct the project (partial completion of design is also known as "bridging"). As mentioned above, the DOT cost estimates for completing the two jobs were very close.

The bid price is the price presented in the best and final proposal from the lowest responsible bidder. The bid price for Thurston Way was high compared to 112th Street. One explanation for this difference is that the bid for Thurston Way includes the price of completing design in addition to construction.

Though cost is the dependent variable in this analysis (form of contract is the independent variable), it is worth noting that the total costs of the two projects are quite close: 112th Street cost just $623,000 more than Thurston Way. Total costs shown are transaction and production costs, which were about $10 million above DOT construction cost estimates on each job.

Comparing Costs

Breakdowns of production and transaction costs for 112th Street and Thurston Way are shown in Table 3.

According to theory, new forms of contract economize. Design–build is a new form of contract in highway delivery, Thurston Way was delivered by this method, and in both tables, transaction costs for Thurston Way were considerably less than those for 112th Street. Fewer DOT hours were required to build Thurston Way.

On the other hand, production costs for Thurston Way were higher than those for 112th Street. Transaction cost savings that may have arisen from the design–build method were eliminated by high production costs paid to the Thurston Way contractor. To understand why this is so, we can take a closer look at the differences between these two types of transactions.

Production Costs	112th Street	Thurston Way	
Contractor Engineering	$0	$2,937,910	Paid to Contractor
Construction (plus tax)	$17,578,190	$21,413,247	Paid to Contractor
Change Orders & Disputes	$3,068,270	$259,813	Paid to Contractor
total	**$20,646,460**	**$24,610,970**	

Transaction Costs	112th Street	Thurston Way	
Preliminary Administration	$674,000	$257,623	DOT Expense
DOT Engineering	$3,651,000	$220,150	DOT Expense
Ancillary Studies	$1,734,389	$586,798	DOT Expense
Bid Administration	$23,033	$707,925	DOT Expense
Contract Administration	$956,000	$667,025	DOT Expense
Outside Agreements & Damages	$67,600	$79,107	DOT Expense
total	**$7,106,022**	**$2,518,628**	

Production + Transaction Costs	**$27,752,482**	**$27,129,598**	

Table 3: Comparison of production and transaction costs, as defined in the engineering and construction literature, for the 112th Street and Thurston Way Interchange projects in the State of Washington.

Two Projects: The Transaction, the Source of Costs

As a transaction, infrastructure project delivery is rife with problems, all of which have cost implications. Recall Douglass North's purchase of oranges from Morris: a simple product in a thriving market, exchanged between people who trust one another, supported in their exchange by a contract so simple that it is implicit. Highways are not simple products, the exchange is meant to be impersonal (but it is not), and the contracts supporting delivery of the product are inevitably incomplete.

Many of the characteristics thought by Williamson to influence vertical integration are present in infrastructure project delivery, such as asset specificity and uncertainty. Contracts are lengthy because design and construction can take a long time to implement. These features make project delivery vulnerable to opportunism. Under such circumstances, vertical integration may be the most economical form of organization; but government agencies are not inclined to enter the construction industry, nor are private firms predisposed to meet the full extent of public demand with private capital for highways.

In empirical analysis, the costs of projects can be compared by questioning the extent to which given forms of contract safeguard against opportunism, whether by personalized exchange, information symmetry, competition, or some other persistent effect. In this way, the following paragraphs attempt to explain the differential costs of 112th Street and Thurston Way.

On the whole, we can see that Thurston Way, if it were representative of design–build contracting, offered no particular cost advantage over the traditional form of contract as administered for 112th Street. The sum of transaction and production costs for the two projects was quite similar. This finding is supported by a recent report to Congress from the US Department of Transportation on SEP-14, which surveyed DOT costs (i.e., preliminary engineering, developing the request for proposals, contract administration and inspection) as well as the costs paid to contractors. Results include comparisons of cost growth between 9 design–bid–build and 11 design–build projects, and suggest favorable costs using traditional methods (SAIC 2006).

Transaction cost economics provides another way of interpreting costs, however, as it is set up with an eye toward monitoring costs as they change over the life of a project; from the time of project approval (when bids are administered), to the award of the contract, to the conclusion of the contract. For 112th Street and Thurston Way, here are four views of cost over time (see Table 4).

Cost Escalation	112th Street	Thurston Way
number 1		
DOT cost estimate	$17,768,795	$17,554,997
Bid price	$18,162,105	$22,725,000
Overrun	$393,310	$5,170,003
Escalation	2%	29%
number 2		
Bid price	$18,162,105	$22,725,000
Production costs (from Table 4)	$20,646,460	$24,610,970
Overrun	$2,484,355	$1,885,970
Escalation	14%	8%
number 3 (standard)		
DOT cost estimate	$17,768,795	$17,554,997
Production costs (from Table 4)	$20,646,460	$24,610,970
Overrun	$2,877,665	$7,055,973
Escalation	16%	40%
number 4		
DOT cost estimate	$17,768,795	$17,554,997
Transaction & production costs	$27,752,482	$27,129,598
Overrun	$9,983,687	$9,574,601
Escalation	56%	55%

Table 4: Four measures of cost escalation calculated and compared for the 112th Street interchange (delivered design–bid–build) and Thurston Way interchange (delivered design–build) projects in the State of Washington.

One view compares the DOT cost estimate to the contractor's bid price, and expresses the difference as a percentage of the DOT cost estimate (number 1, above). By this measure, the bid price for 112th Street came in 2 percent above the DOT estimate. DOT estimates of the market value for constructing 112th Street were on target. The Thurston Way bid was 29 percent above DOT estimates.

The bid price serves as the private sector's estimate of construction costs. To try to learn the accuracy of the bid price, one might compare the bid price to the actual cost of construction, and express the difference as a percentage of the bid price (number 2). By this measure, costs escalated

14 percent on 112th Street, and 8 percent on Thurston Way. Thurston Way's contractors had a good understanding of how much it would cost to build the job—or perhaps they bid high enough to cover costs adequately—and the outcome suggests that they controlled their costs fairly well during project execution.

The international standard for cost escalation is calculated by subtracting the DOT cost estimate from the actual cost of construction, and expressing the difference as a percentage of the DOT estimate (number 3). By this method, 112th Street costs were only 16 percent above estimates, while Thurston Way costs escalated 40 percent.

To take transaction costs seriously, we would estimate escalation by subtracting DOT estimates from the sum of transaction and production costs, and express the difference as a percentage of DOT estimates (number 4). The results are a bit different, and illuminating. Costs for 112th Street escalated 56 percent while costs on Thurston Way escalated 55 percent. Clearly, DOT estimates did not reflect the total cost of completing these projects, and cost escalation can be an issue for both forms of contract.

Several questions emerge from this comparison. First, the DOT was able to estimate the market value of 112th Street with accuracy. Why was the bid price for Thurston Way so comparatively high?

Second, Thurston Way's bid price and actual payments to the contractor were quite close, while the actual payments to the contractor on 112th Street went up as construction was completed. Why were costs on Thurston Way controlled more effectively than those on 112th Street?

Third, if we use DOT estimates as a basis for expectations, and we only analyze cost incurred by the contractor, Thurston Way escalation suggests that design–build is not an improvement over design–bid–build. However, when transaction costs are included, costs on Thurston Way are considerably higher, and costs on 112th Street even more so. Why did this occur?

Differences between the two forms of contract, and the safeguards they provide against uncertainty and opportunism, suggest answers to these questions.

Question One: The Gap between Estimates and Bids

Highways are expensive investments made in an uncertain world. Traditional delivery methods dish out funds slowly and save the largest sum for last, when designs are 100 percent complete and construction begins. The idea is to reduce uncertainty as much as possible before

sinking funds into the project. The benefit of this strategy arises from the fact that it is extremely expensive to change contractors or make large design changes once a construction contract is signed. By completing design 100 percent and specifying quantities and unit prices to bidders (as is the custom on design–bid–build jobs), a DOT is able to anticipate, with some accuracy, the market value of the construction work to be done. This view supports the DOT's ability to estimate construction costs within 2 percent of the lowest responsible bid on the 112th Street project.

Design–build contracts do not control for uncertainty in the same way; much or all of the funding is approved early in the design phase of work. The contract for Thurston Way was signed with 30 percent of design complete. With so little design finished, it can be difficult for a DOT to accurately estimate the cost of construction. Amongst owners, the need to improve conceptual estimating for design–build is a common concern.

Furthermore, bidders on design–build work (which tends to be awarded in lump-sum contracts) generate their own quantities and unit prices in the process of preparing their bids, and they are not required to share this information with the DOT. Bidder's designs can – and do – differ from one another, and may differ in significant ways from the design solutions already envisioned by the DOT. The DOT and contractors have different mental models of what will be built. This explains in part why Thurston Way's bid price was above the DOT estimate.

Another important factor in this elevated bid price is risk. On traditional bids, the DOT is responsible for design, and the DOT accepts virtually all of the risk associated with executing design. Complex contracts are inevitably incomplete: unforeseen problems will arise during construction. If, as in traditional delivery, the contractor does not have to shoulder the risk of unforeseen problems (they will simply bill the DOT through change orders), then the contractor's bid will not be elevated to absorb risk.

The opposite is true of design–build. On design–build bids, the contractor is asked to assume some (or most) of design and construction risk. Also, since these projects tend to be lump-sum awards, and the contractor is allowed to keep its books closed (not sharing breakdowns of materials and labor in costs), it is practically impossible—even on a simple interchange project like Thurston Way—for the DOT to determine whether the elevated price is actually tied to a reasonable expectation of risk or the effect of profiteering.

Then, too, there is the fact that this was the first design–build project bid in the State of Washington. Bid prices could reflect the contractor's place on a learning curve, and the same is true for a low DOT estimate. Furubotn and Richter (1991) call this the cost of creating and changing institutions and organizations. Any or all of these accounts can explain why Thurston Way's bid price was above the DOT estimate.

Question Two: The Gap between Bid Price and Construction Cost

Thurston Way's bid price seems high, but as construction was completed, the contractor on Thurston Way did not receive much more than the bid price for the work (8 percent), while the contractor for 112th Street was paid 14 percent more than their bid price. Note, as shown in Table 4, the comparative cost of change orders and dispute resolution between the two projects. Dispute resolution was of little consequence. The cost of change orders was significant, however. On 112th Street there were 76 change orders filed, at a total cost of more than $3 million. On Thurston Way, there were 29, at a cost of just over $250,000.

Change orders reflect design risk, as mentioned above. When contractors are responsible for risk, they are less likely to request compensation from the DOT when a flaw in design is discovered, or when an unforeseen risk is not adequately addressed with the existing design. For this reason, fewer change orders can be anticipated from design–build contracts, and construction costs should closely reflect bid prices. At least, it seems that this is the case for these two interchange projects, and could also be true for other small-scale work, though the recent report to Congress suggests that change orders on design–build jobs occur less often, but cost more.

Question 3: The Sum of Transaction and Production Costs

Now to the question of transaction costs: both projects seem quite expensive when DOT estimates are compared to the sum of production and transaction costs. 112th Street cost 56 percent more than estimates, and Thurston Way cost 55 percent more.

To be fair, methods of cost estimation from project to project can differ tremendously. They can be completed in-house (by DOT staff), with the assistance of individual consultants, with a team of third party experts, or in the hands of private engineering firms. While it is possible that some methods of estimating are better than others, efficiency in transaction cost economics is not a question of how estimates compare to outcomes as much as it is a question of how outcomes compare to each other. In other words, actual comparative breakdowns of production and

transaction costs can reveal the source of cost escalation, cost estimates notwithstanding.

The total cost of both projects is close; a difference of about $623,000. Given production and transaction costs, differences emerge between the two projects. Note the transaction costs attributed to 112th Street: these costs are $7.1 million; on Thurston Way they are around $2.5 million. This outcome seems to evidence the opposing characteristics of the two forms of contract: the DOT completed design of 112th Street, while the contractor completed design of Thurston Way. We can see the benefit of transaction cost theory, however, by exploring in greater depth the reasons for these variations in cost broken down into basic categories for engineering, construction, project administration, and ancillary studies.

The total cost of engineering for each project, whether undertaken by the DOT or a private firm, did not differ appreciably. This finding is important because the debate over public versus private engineering is entrenched. Proponents of private engineering argue that the monopolistic provision of design services by a DOT can allow inefficient operations to persist, while the experience of private firms across many markets along with competitive pressure drives down the cost of private engineering and construction. Proponents of public engineering argue that, hour for hour, public engineers cost less, while private firms charge for profit as well as overhead expenses. Though such arguments cloud the literature, they did not influence cost on these two projects.

The cost of construction was greater for Thurston Way. Besides the explanations given earlier in this paper (as in the potentially high cost of contingencies or profit-seeking on the part of the contractor), further research into construction costs show that the contractor for Thurston Way charged more for mobilization and quality assurance and control (Table 5). Mobilization costs are among the first payments made to contractors, and they may house payments for risk-sharing and profit. Higher costs for quality assurance and control reflect the fact that on design–build work, the contractor assumes much of the responsibility for quality assurance (sometimes quality control, as well), while on design–bid–build jobs this is a task for the DOT.

Preliminary administration of 112th Street was more expensive than that for Thurston Way. Ancillary studies (environmental, public outreach, geotechnical, utilities, rights-of-way) for 112th Street reportedly cost more than they did for Thurston Way (inaccuracies in cost accounting for environmental services, however, could have skewed results).

Construction Cost	112th Street	Thurston Way	
Mobilization	$1,124,000	$2,150,700	
Grading	$3,256,200	$5,335,875	
Structure	$3,054,740	$2,203,217	
Pavement	$1,917,200	$2,746,500	
Other Construction	$6,324,000	$6,159,700	
Traffic Control	$411,000	$223,300	
Quality Assurance & Control	$51,050	$1,126,100	
Warranties	$0	$50,000	
Sales Tax	$1,440,000	$1,417,855	
Total Construction Cost	**$ 17,578,190**	**$ 21,413,247**	Paid to Contractor

Table 5: Comparison of construction costs paid to the contractor for the 112th Street and Thurston Way Interchange projects in the State of Washington, shown by function.

On the other hand, once design was complete, there was a small price to pay to administer the bid for 112th Street. On Thurston Way, funds were allocated more rapidly, but bids were administered with only 30 percent of design complete. Perhaps conscious of the downstream risk created by going to bid with little design, the DOT spent almost $700,000 more preparing and administering the bid for Thurston Way compared to 112th Street.

With the exception of change orders (discussed above), there was little variation in the cost of administering the two contracts once construction began. Variations in costs associated with outside agreements (as with neighboring property owners), third party damages, and dispute resolution were also negligible.

On the whole, it seems that Washington's DOT has managed to implement a new form of contract (design–build)—a complex undertaking—without incurring an overall change in the cost of project delivery. To those expecting design–build to lower costs, this may have been a disappointment. By the numbers, WSDOT spent $7.1 million in-house on 112th Street, and only $2.5 million on Thurston Way, but any savings this may have represented were paid out to the contractor, which earned $4 million more on Thurston Way. When further breakdowns of

cost are compared, however, it does seem that some projects may be more suitable than others for this new form of contract, given clear differences in the cost of change orders, ancillary studies, bid administration, contract administration, and construction (mobilization and quality assurance) witnessed in these two projects.

Washington's Institutional Context for Design–Build

It is not possible to do a longitudinal study of design–build delivery in Washington at this time because Thurston Way is the only finished project. However, three other projects are underway. Since Thurston Way did not bring about significant cost savings, motivation for the continued use of design–build in this state is worth exploring.

In 1998, a bill was passed authorizing Washington's DOT to test the design–build method of contracting (SB 6439). At the time, public perception of DOT performance was at a low point. Population and vehicle miles traveled had grown at a steady clip since 1980, while centerline miles remained constant and the overall system continued to age. The gas tax stood at 23 cents per gallon, and had not been raised since 1991. Cost and time overruns in project delivery were a recurring theme in past legislation (HB 2848, SB 5572, SB 6466, SB 6061). In 1998, a blue ribbon commission on transportation was formed to review transportation administration, funding, and investment.

The DOT's most recent transportation plan projected $50 billion in unfunded transportation needs (roads and highways) over the next 20 years. Public appetite for tax increases could not keep pace, and such estimates furthered public perception that spending at the DOT was unrestrained. Initiative 695 (1999) abolished the motor vehicle excise tax. Referendum 51, which would have raised the gas tax by 9 cents, was defeated by the voters in 2002. The blue ribbon commission asked for more funds, but also accountability and efficiency.

Nationwide, the building sector had made considerable use of design–build, and a widely published study of cost and time savings in 351 projects (Sanvido and Konchar 1999) led people to believe that similar outcomes were possible in transportation. One study of 11 design–build projects in Florida (Ellis 1992), demonstrating 33 percent faster delivery, captured the attention of the FHWA, and its results were not lost on Washington. A FHWA program had already promoted the use of federal aid for design–build projects in 20 states (FHWA 2000). On the promise of a successful pilot program, the blue ribbon commission endorsed design–build delivery (Blue Ribbon Commission 2000).

Two projects were selected for Washington's design–build pilot program. Thurston Way was the only one initiated. To learn the value of design–build, the DOT hired Keith Molenaar of the University of Colorado to observe the development of the project and report on results. The research design and analytic depth of Molenaar's report (2003) is typical of the professional literature. Table 6 compares his cost evaluation of Thurston Way to the data presented in this paper.

Thurston Way Costs	Whittington	Molenaar	Molenaar Source
Preliminary Administration	$257,623	$0	See Bid Admin
Ancillary Studies	$586,798	$0	See Bid Admin
DOT Engineering	$220,150	$0	See Bid Admin
Bid Administration	$707,925	$800,542	DOT pre-Bid Exps
Contract Administration	$667,025	$417,109	Construction Eng
Contractor Engineering	$2,937,910	$2,942,910	BAFP
Construction (plus tax)	$21,413,247	$21,221,229	BAFP plus tax
Outside Agreements & Damages	$79,107	$0	
Change Orders & Disputes	$259,813	$228,216	Change Orders
Total Cost	$27,129,598	$25,610,004	

Table 6: Comparison of cost data collected on the Thurston Way Interchange in the State of Washington using actual costs, by Whittington, and the typical approach in the engineering literature, comparing actual costs to cost estimates, by Molenaar, et. al. (2003).

Molenaar's task was to compare the cost of developing Thurston Way (design–build) to estimates of developing the same project using traditional methods (design–bid–build). The DOT provided cost estimates. Molenaar produced his report near the end of construction (January 2003). What he called the actual cost was the bid price (price according to the Best and Final Proposal, or BAFP). His cost of change orders were estimated from a sampling of such costs on other DOT projects.

Molenaar's analysis seems implicitly informed by a neoclassical emphasis on price. Findings suggested that Thurston Way costs were high (23 percent more than estimates), but the reasons for those elevated costs

were not clear. Analysis focused on small amounts, such as the $50,000 warranty bond and $250,000 for pavement preservation. That being said, Molenaar's study suggested that Thurston Way was built 5 months (16 percent) ahead of schedule (see Figure 4). By these measures, one would conclude that design–build might not save money. Instead, it saves time.

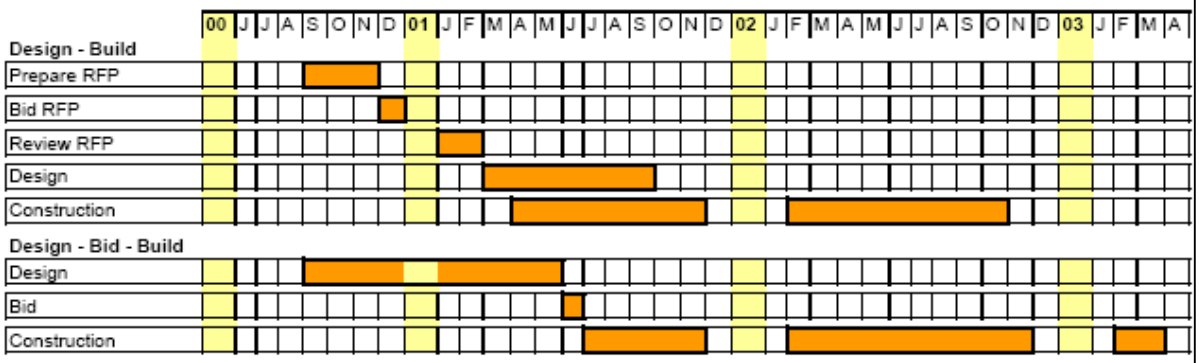

Figure 5: Schedule data with an estimate of the time needed to complete the Thurston Way Interchange project in the State of Washington using traditional (design–bid–build) methods compared to the actual project schedule according to design–build method of delivery. Note: construction of Thurston Way was actually completed in July 2003. Figure is from Molenaar published in January 2003 (et.al., page 21).

Time savings on this one job contributed to the impression that design–build could be a useful tool. In 2003, Washington passed its first transportation package in over 10 years (consisting of HB 2231, SB 5748, SB 5248, and SB 5279). It centered on a 5 cent gas tax increase, to be spent on projects itemized—with budgets and dates for going to bid—by the Legislature. The DOT began to publish project-level cost estimates, bid prices, and construction costs, calling attention to delays and overruns (Washington State 2005, McDonald 2005). The nickel package influenced design–build delivery; Legislators selected projects with the knowledge that some would be developed using this method of delivery. The success of the nickel package was followed by a 9.5 cent increase in gas taxes in 2005, with a new set of projects selected by the Legislature.

In these years, the state moved forward on a public–private initiative to build Tacoma Narrows Bridge. Public–private partnerships depend on design–build methods of delivery because investors want private contractors to absorb design and construction risk. It is worth noting that the same firms that build these projects invest in them (including Bechtel and Kiewit on Tacoma Narrows), and promote, through the Association of General Contractors and the Design–Build Institute of

America, the passage of enabling legislation. Washington's enabling legislation speaks to the marketability of these firms, as well as the strengths of design–build in general. The text is short, and it reads as follows:

> RCW 47.20.785
> Design–build — Qualified projects. *(Expires April 30, 2008.)*
>
> The department of transportation may use the design–build procedure for public works projects over ten million dollars where:
>
> (1) The construction activities are highly specialized and a design–build approach is critical in developing the construction methodology; or
>
> (2) The projects selected provide opportunity for greater innovation and efficiencies between the designer and the builder; or
>
> (3) Significant savings in project delivery time would be realized.
>
> [State of Washington, 2001 c 226 § 3.]

Washington has few administrative regulations applicable to design–build delivery (there are a few related to right-of-way and bridge design). Instead of administrative regulations, the selection of projects for design–build and their administration is currently guided by a high-level team of leaders in the functional areas of project delivery, and lessons learned are wrapped and revisited in a rather comprehensive guidebook. This organizational and institutional structure corroborates the perception amongst DOT managers that there is a learning curve associated with movement to a new form of contract, which calls for the flexibility to learn from experience on a project-by-project basis.

Since Thurston Way and Tacoma Narrows, two other design–build projects have been initiated, generally based on the idea that quick delivery is necessary. States were competing to lure Boeing away from Washington, and the firm wanted a widening of I-5 adjacent to one of their plants. The Olympics are coming to Vancouver in 2008, and a widening of the I-405 would be useful at that time. Bid prices for these jobs came in 19 and 12 percent above DOT cost estimates, respectively. Yet, the use of design–build is expanding: in 2006 the Legislature passed a new law creating a pilot program for small design–build projects, between $2 million and $10 million in size. How important is the role of timing in delivery?

Comparing Schedules: Explaining Design–Build's Success

The difference between the time it took to deliver 112th Street and Thurston Way is striking. 112th Street was delivered in ten years, and Thurston Way was delivered in five. Their cumulative expenditures over time are shown in Figures 6 and 7.

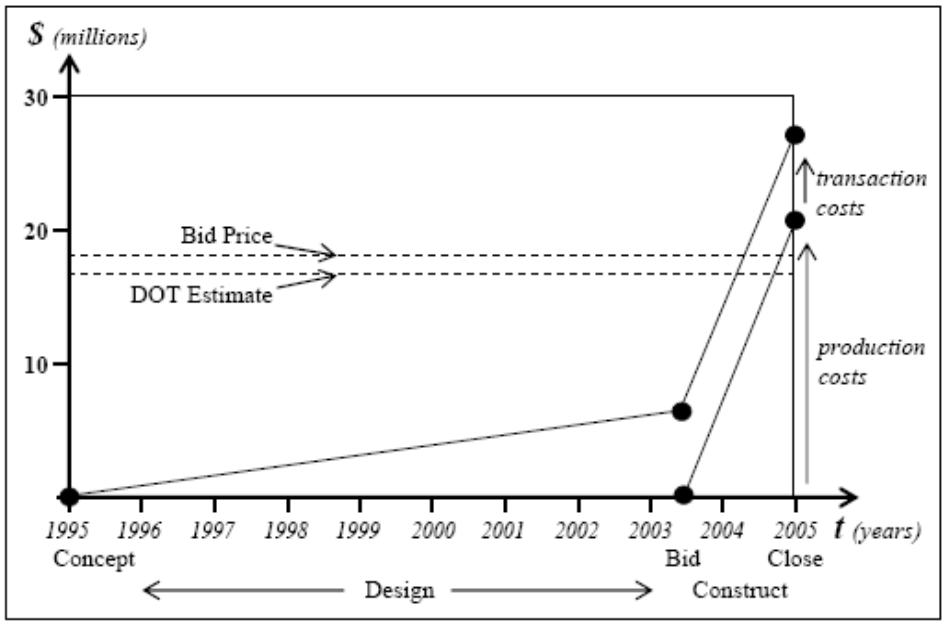

Figure 6: Cumulative expenditures over time on the 112th Street interchange, a design–bid–build project in Washington.

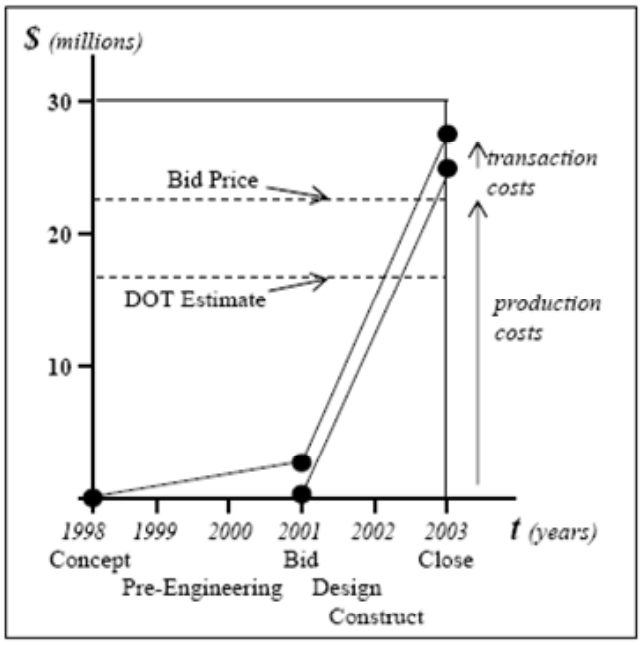

Figure 7: Cumulative expenditures over time on Thurston Way interchange, a design–build project in Washington.

The professional literature and promoters of design–build tout the savings possible when construction begins before design is complete. These were the findings in Molenaar's review of Thurston Way, and of the recent report to Congress on the effectiveness of design–build. And, this is precisely the reason for the design-sequencing program in Caltrans: to capture savings to schedule from concurrent engineering, sometimes known as "fast-tracking." Our observations in Washington suggest, however, that few savings occur in this way. The bulk of savings come from another source, particularly salient to California.

In Washington, as in California, state funds are allocated to projects geographically. In California, funding is not only geographic; it is for six discrete phases of project development, such as engineering, right-of-way, and environmental review. Geographic allocation may be politically desirable, but in terms of project schedule, it can be incredibly inefficient. 112th Street funding stopped and started several times, resulting in a seven year period of design development. Design–build requires the allocation of funds up front, or rather early in project development (depending on the extent of "bridging").

The Washington Legislature has recognized the ability of design–build to expedite delivery. Since the passage of enabling legislation for design–build in 2001 (as mentioned above), they have participated in the selection of projects in major bond packages on the promise of shortened schedules, going so far as to stipulate deadlines for going to bid for each project. In institutional economic terms, the differential ability of design–build to deliver projects faster creates a new form of currency for the Legislature; a political body whose efficient workings depend on the ability to trade.

Still, the Legislature and DOT do not operate in a vacuum. As detractors from institutional economics suggest, political institutions have added complexities. Among the most classic and common are the relationships forged between special interest groups and politicians, furthered by campaign contributions and endorsements. In infrastructure contracting, labor organizations hold considerable clout, and design–build contracting represents change for their membership.

The Question of Impacts to Labor Organization

To deliver fast requires significant change in internal organization, especially when a DOT is arranged in stovepipe fashion, or by function. Both Washington and California have this organizational arrangement. More importantly, in political circles, however, is the need to clarify the place of design–build contracting in an already complex array of institutions supporting organized labor. At the top of this list are public engineers.

Design–build is a form of privatization. For owners accustomed to completing designs in-house (as in Caltrans), design–build requires transferring anywhere from 70 to 100 percent of engineering on any given project to the private sector. In Ohio and Florida, design–build has been accompanied by layoffs of approximately 30 percent of the transportation department. Thurston Way (design–build) required far fewer WSDOT personnel than 112th Street (design–bid–build); in terms of expenditures in-house, this amounted to $2.5 million compared to $7.1 million.

Like California, Washington supports collective bargaining for public engineers, and has for many years. Prior to the passage of design–build legislation, Washington's DOT experienced some loss of personnel when an anticipated transportation package failed to earn voter support. At the time, public opinion polls found voters dissatisfied with the speed and expense of project delivery. Perhaps in relation to those reductions, WSDOT gradually began to contract out for design. Today this rate is somewhere between 20 and 30 percent across the state, though variations between regional offices are extreme. It makes sense to contract out in locations difficult to serve with state levels of pay, for example.

WSDOT personnel interviewed for this study referred to an agreement between public engineers and the State that supports the use of design–build contracting (and any other form of private engineering) as long as those contracts do not result in a state employee losing his or her job. WSDOT's quarterly review of projects, known as the Gray Notebook, includes levels of employment (making this agreement easy to monitor).

Design–build can harness the private sector in ways that increase the productivity of the department (when productivity is measured in terms of the speed or cumulative value of projects delivered in relation to the number of public employees). Washington uses design–build to temporarily increase the workforce in times of peak demand, and to allow the temporary hire of special engineering services for projects of unusual magnitude or scope, such as the Tacoma Narrows Bridge.

Private sector unions do not always promote design–build: large engineering and construction firms have the most to gain. Small firms need to reorganize to enter the market, and compete by generating plans with bids that may only result in partial compensation (a stipend). Still, small firms will venture into new markets. Thurston Way was won by an engineering firm and construction firm prominent in the local market and new to design–build. The recent report to Congress finds no appreciable difference between the percent of project costs paid to small firms on design–build in comparison to design–bid–build.

In California and Washington, prevailing wage laws remain in place, even on design–build projects. The Davis-Bacon Act still applies. On the project level, however, other issues arise from the authority, timing and order of this type of contract. On traditional jobs, the design is complete before going to bid, and it is relatively easy for the public authority to stipulate special requirements for project delivery, such as the amount of work taken up by unions and firms owned by minorities, women, and the disabled. On design–build jobs, the contract is signed before design is complete (sometimes before design has begun). If contractors are asked to list their subcontractors on the job at the time of signing, those subcontractors may benefit from a locked-in relationship between their firm, the contractor, and the state. Having monopolized their service, they may raise their prices at will.

Project labor agreements can stipulate the details of contract the State would like exercised during the course of project delivery, and they are common for design–build jobs, especially when private financing is included (also known as public–private partnerships). Washington has used them. Care should be exercised in their use, however, because case law may allow the project labor agreement to supersede statewide collective bargaining agreements.

It is important to note that in Washington the development and passage of design–build legislation was accompanied by intensive talks between the DOT, the Association of General Contractors, and the American Council of Engineering Companies. A forum for labor to continue their close contact with the DOT over design–build implementation is ongoing, with regular meetings and publicly available minutes. Organized labor is not the only special interest group impacted by design–build, however.

Environmental Compliance: Permitting, Review, and Monitoring

The efficient management of design–build depends on the State's use of performance standards and the private development of design to those standards, but our environmental institutions do not yet have the capacity to manage (or monitor) contracts for project delivery in this way. The National Environmental Policy Act (NEPA) and its state-level equivalents were designed to fit a design–bid–build process. Consider the following diagram (Figure 8), illustrating four tried methods for integrating environmental review with design–build.

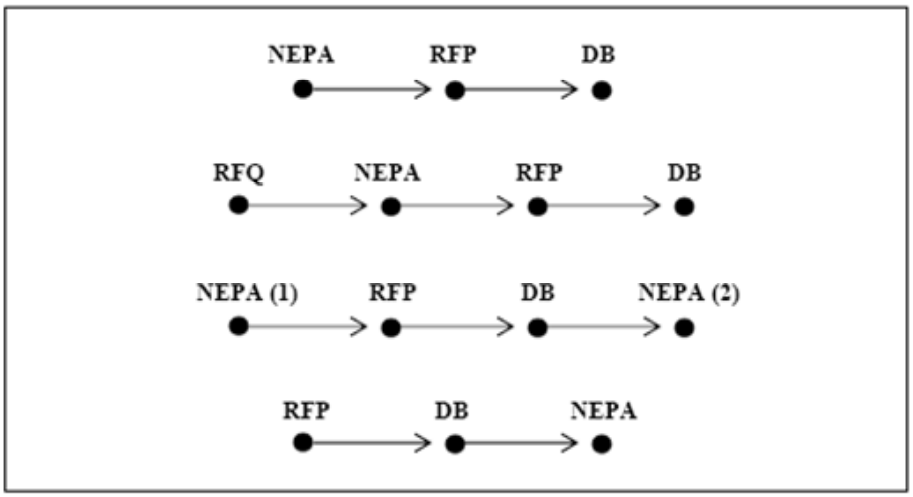

Figure 8: Four potential integrations of the National Environmental Policy Act (NEPA) and design–build contracting (DB), with attention to the timing of publishing requests for qualifications and proposals (RFQ and RFP, respectively). NEPA (1) refers to the passage of a programmatic Environmental Impact Statement, while NEPA (2) refers to related requirements at the project level.

While administrating SEP-14, the FHWA required most design–build projects to complete NEPA requirements prior to publishing the request for proposals. Thus, most design–build projects have been delivered using the first process. There are several problems with this order of events.

Environmental review depends on a shared understanding of what can and will be built. Impacts do not occur in isolation; they occur as the result of planned and executed actions on the part of engineers, constructors, and the state. In institutional economic terms, the environmental impact statement is a contract between the public, the state,

and contractors, and is no less binding than any other agreement. A great deal of information is required to surmise the alternatives for development and the effects they will have on the environment. Designs are a necessary ingredient to environmental review, because environmental consequences flow from design.

Economically speaking, it is in the state's best interest, when hiring a design–builder, to limit in-house design work to a minimum. The design–build industry suggests that states provide as little as a footprint: a line marking the limit of work. Environmentally speaking, it is impossible to assess the impact to the environment based solely on the limit of work. That is, many of the calculations necessary to determine impacts would be unavailable. For example, one may be able to identify impacts to terrestrial wildlife habitat from a limit of work, but without designs, drainage and stormwater runoff cannot be estimated, and these are critical determinants of impacts to aquatic species.

In institutional economic terms, environmental review is supposed to conclude with a commitment to a design (the preferred alternative), and it is economically difficult to do that when a contract with a designer has not yet been signed. Ex post, complications mount, because contractors will make and change designs, and those changes have environmental implications that—if not caught early—may have to be addressed in the field or in court. This turn of events on the Legacy Parkway (Interstate 15, Utah) led to a case requiring a supplemental environmental impact statement (EIS) and revised 404 permit. Even if a supplemental EIS is not ordered by the court, environmental changes lead to change orders. In design–build, change orders can bear an unusual expense; we have heard of a state paying as much as $1000 per change per sheet for each adjustment to plans. These findings are reinforced in the recent report to Congress, which found that change orders occur less often but tend to be more expensive on design–build jobs.

Texas has made use of the second process (see above) on a public–private partnership: they issued a request for qualifications (RFQ), selected a short list of qualified teams, and involved those teams equally in the NEPA process. Teams reviewed each alternative and provided comments to managers of the NEPA process. After the record of decision was issued, the request for proposals was published, and the teams submitted technical and price proposals (KCI 2005). This procedure may benefit projects facing complex environmental issues, especially those that could conceivably benefit from design innovations. It could also be more expensive, requiring either larger stipends to losing firms or the need to limit its use to projects suitable for large scale engineering and construction firms.

Oregon has made use of the third process, on a large scale effort to replace over 350 bridges across the state. In advance of contracting, the state spent about $20 million studying the environmental context for these projects, compiling data into a statewide geographic information system. They then coordinated a series of programmatic agreements, including a biological opinion for the Endangered Species Act, a general permit for Section 404 of the Clean Water Act, archaeological excavation agreements with tribal groups, and prioritized sites for mitigation banking. Importantly, these bridge replacements did not involve expansion; the limited scope of work and early investment in environmental assessment allowed the agencies to develop environmental performance standards applicable to these jobs. When the design–builders were brought on board, they had an environmental baseline report to review for each bridge site; they performed preconstruction assessments and submitted preliminary designs to environmental agencies for approval. Other states have tried programmatic environmental review, Washington included, though Oregon's approach seems thorough for the way it addresses the entirety of environmental compliance (review, design, and permitting) and captures economies of scale.

The fourth method has been used by several states on public–private partnerships, including California, on State Route 125. Under this model, the design–builder is hired before NEPA review. Though problems of inadequate design information during environmental review are eliminated with this course of action, other problems arise. It is difficult to contract with a design–builder prior to environmental review because the design–build contract is supposed to be based—especially when bid lump-sum—on a particular design that the contractor has in mind, yet the alignment and basic elements of design are not supposed to be selected until environmental review is concluded. Contractors will have preferences for alignment and design that result from their past experience, equipment, and skill sets, and they are driven in their desire to see an alignment and design emerge that fits their profile of cost and risk in these terms. It is so difficult for a contractor to be unbiased in this process that some have termed it "NEPA with advocacy," meaning the contractor becomes an advocate for the alternative in environmental review that they prefer. There are also cost consequences to keeping a contractor on board for the duration of environmental review and approval. It took over 10 years to acquire environmental approvals for SR 125 (a very long time for contract execution), and this only occurred after the alignment moved to avoid impacts to a nature preserve.

Setting aside environmental review, one other complication afflicts design–build. Realizing the need for design to inform environmental

decisions, states have begun to contract out environmental permitting to the design–builder. When projects take advantage of concurrent engineering, environmental permits can become the last items preventing the contractor from starting construction. The pressure to build quickly creates strong disincentives for environmental permitting and performance.

On Thurston Way, Washington kept environmental permitting in-house. Environmental agencies reportedly felt crushed for time; the final environmental permit (required before construction may begin) arrived late. In interviews, DOT managers expressed concern about the implications of this pressure for their ongoing relations with fellow agencies, such as the Department of Ecology. They have been taking a close look at the environmental implications of design–build ever since. On the 405 expansion, the DOT is covering the cost of some personnel from the Department of Ecology, who have been co-located with the DOT and the contractor.

Key Findings and Recommendations

The basic ideas of institutional economics from Oliver Williamson and Douglass North ring true in the case of design–build contracting. As an innovative form of contracting, design–build was instituted in the transportation sector for the purpose of economizing on transaction costs. Public opinion polls in Washington State showed concern over the length of time and cost to deliver projects. Design–build seemed suitable, because it allowed concurrent engineering and harnessed the private sector.

Public perception was incorrect: projects that take longer to build don't necessarily cost more to build. This research (though of a limited sample), corroborated by the recent report to Congress on SEP-14, suggests that design–build does not bring about cost savings. Any savings that would accrue seem to be passed on to the contractor.

Design–build did not lower the comparative cost of the intersections we studied, nor did it eliminate the prospect of change orders. Risk can and will trump price, even when projects are bid lump sum. Contracting with "closed books" does not help this situation. When risks rise beyond those anticipated by the contractor, they will still befall the DOT. Given opportunism and enough information asymmetry, a DOT may unwittingly take on a risk that the contractor is actually able and prepared to bear. WSDOT, like every other DOT governing closed-book contracts, may never know if the funds paid out to design–build contractors are for real expenses, anticipated risks, or higher margins.

Projects in risky settings should seek a new form of contract; one that is more transparent for all the parties involved.

Design–build is a form of privatization. As such, it fits an ideological mold dating back to Adam Smith (rapidly popularized by Milton Friedman), which would limit the work of government to that which the private sector cannot perform. Design–build requires a great deal of internal reorganization to carry out. Washington devotes its brightest and most experienced personnel to these jobs, co-locates with the design–builder, and conducts over-the-shoulder reviews of designs. These jobs require fewer DOT personnel than traditional jobs. For those who ideologically tie efficiency to the reduction of government, this is the only fuel necessary to start a fire promoting design–build. This may be the situation in some states.

Washington's situation provides us with more insight, however. Efficiency is in the eye of the beholder. Some people care about productivity, measured as projects delivered over time with a given governmental workforce. DOTs can institute design–build without giving away jobs, and they might want to do so in order to increase productivity in times and places of peak demand (or where governmental posts are difficult to fill). DOTs are even more likely to do so if the Legislature realizes the time savings possible from design–build.

The professional literature and promoters of design–build constantly point to the time saved on design–build jobs from concurrent engineering. Molenaar's study of Thurston Way found a savings of five months in the delivery schedule. Our research shows that the time saved by using design–build in comparison to design–bid–build can be much more dramatic than this, and that the bulk of savings is not attributable to concurrent engineering. Design–build cuts through the stove-piped, geographic allocation of funds for project delivery, saving projects from the stop and start (and subsequent redesign) process that kept 112th Street in the design phase for almost seven years. The ability of some projects to be guaranteed delivery in a rapid timeframe creates a new form of currency for trading on the floor of the Legislature. Costs do not drive every project. For some, expedited delivery will be more important.

Expedited delivery is not something that should be exercised at random, however, because it can have serious consequences. If there is one arena where public engineers and promoters of design–build are united, it is in the cause of streamlining the environmental requirements of project delivery, and this pressure is being exerted at the highest and lowest levels of government. On May 25, 2006, the FHWA issued new proposed rules intended to streamline environmental review on design–

build jobs, in light of complaints about environmental complications during the execution of SEP-15 and public–private partnerships. Language applicable to SEP-15 and public–private partnerships will often fit design–build: virtually all private investors demand design–build delivery for its ability to give design and construction risk to a private contractor. Five states are being asked to assume responsibility for administration of NEPA in this sector, and one of those states is California.

Yet, there are no quick fixes to the complex problems that arise in the overlap of environmental requirements with design–build delivery, and the existing and proposed sets of rules from the FHWA do not necessarily support best practice in this field. Our research relevant to environmental streamlining can best be summarized into three recommendations. Do not lock-in to a contract with one design–builder until the record of decision (or categorical exclusion, or finding of no significant impact) has been issued. On the other hand, do not go through with environmental review in the absence of a design and alternatives that the government will commit to, irrespective of price. This may seem like an impossible dilemma, but it is not. It is solved by paying more up front, for environmental baseline data and performance measures, and for healthy stipends to bidders brought on board with a request for proposals issued alongside environmental review.

Author's Note

This research is ongoing, thanks to the generous participation of data and time from the departments of transportation in Washington, Ohio, Florida, Oregon, Texas, and California. At the time of this writing, data on twelve projects has been collected: one pair from Washington, three pairs from Ohio, and two pairs from Florida. The principal product is Jan Whittington's Ph.D. dissertation, expected for filing in December 2006.

References

Alchian, Armen. 1950. Uncertainty, Evolution and Economic Theory" *Journal of Political Economy* 58:211–221.

Argyres, Nicholas, & Liebeskind, Julia Porter. 1999. Contractual Commitments, Bargaining Power, and Governance Inseparability: Incorporating History into Transaction Cost Theory. *The Academy of Management Review* 24(1):49–63.

Barzel, Yoram. 1997. *Economic Analysis of Property Rights.* Cambridge University Press.

Bendor, Jonathan, & Swistak, Piotr. 2001. The Evolution of Norms. *American Journal of Sociology* 106(6):1493–1545.

Berger, Peter, & Luckmann, Thomas. 1967. *The Social Construction of Reality*. Garden City: Doubleday.

Blue Ribbon Commission on Transportation. 2000. *Final Recommendations to the Governor and Legislature.* Olympia, WA.

Chandler, Alfred. 1977. *The Visible Hand: The Managerial Revolution in American Business.* Cambridge, MA: Harvard University Press.

Coase, Ronald. 1937. The Nature of the Firm. *Economica* 4(16):386–405.

Coase, Ronald. 1960. The Problem of Social Cost. *Journal of Law and Economics* 3:1–44.

Coase, Ronald. 1993. 1991 Nobel Lecture: The Institutional Structure of Production. *The Nature of the Firm: Origins, Evolution, and Development.* O. Williamson and S. Winter, eds. New York: Oxford University Press.

David, Paul. 1975. Clio and the Economics of QWERTY. *American Economic Review* 75:332–337.

Eldredge, Niles, & Gould, Stephen Jay. 1972. Punctuated Equilibria: An Alternative to Phyletic Gradualism. *Models in Paleobiology.* T. Schopf, ed. San Francisco: Freeman Cooper.

Ellis, Ralph, Jr., & Kumar, Ashish. 1992. Final Evaluation of the Florida Department of Transportation's Pilot Design–Build Program. *Transportation Research Record* 1351:94–105.

Flyvbjerg, Bent, Mette Skamris Holm, et al. (2002). "Underestimating Costs in Public Works Projects: Error or Lie?" Journal of the American Planning Association 68(3): 279-295.

Friedman, Milton. 1962. *Capitalism and Freedom.* Chicago: University of Chicago Press.

Furubotn, Erik, & Richter, Rudolf. 1991. The New Institutional Economics: An Assessment. *The New Institutional Economics.* E. Furubotn and R. Richter, eds., pp. 1–32. College Station: Texas A&M University.

Goldberg, Victor. 1976. Regulation and Administered Contracts. *The Bell Journal* (Autumn).

Granovetter, Mark. 1985. Economic Action and Social Structure: The Problem of Embeddedness. *American Journal of Sociology* 91(November):481–510.

Hamilton, Alexander; Jay, John; et al. 2001 [1788]. *The Federalist: A Commentary on the Constitution of the United States.* New York: Modern Library.

Hayek, F.A. 1944. *The Road to Serfdom.* Chicago: University of Chicago Press.

Hirsch, Paul, & Lounsbury, Michael. 1996. Rediscovering Volition: The Institutional Economics of Douglass C. North. *The Academy of Management Review* 21(3):872–884.

Hirschman, Albert. 1970. *Exit, Voice, and Loyalty: Responses to Decline in Firms, Organizations, and States.* Cambridge, MA: Harvard University Press.

KCI Technologies. 2005. *Current Practices in Public–Private Partnerships for Highways.* Baltimore: Maryland Transportation Authority.

Kuhn, Thomas. 1970. *The Structure of Scientific Revolutions.* Chicago: University of Chicago Press.

Levy, Brian, & Spiller, Pablo. 1994. The Institutional Foundations of Regulatory Commitment: A Comparative Analysis of Telecommunications Regulation. *Journal of Law, Economics and Organization* 10(October):201–246.

Marshall, Alfred. 1949 [1920]. *The Principles of Economics.* London: Macmillan.

McDonald, Douglas. 2005. *Measures, Markers, and Mileposts: The Gray Notebook for the Quarter Ending September 30, 2005.* Olympia: Washington State Department of Transportation.

Moe, Terry. 1990. The Politics of Structural Choice: Toward a Theory of Public Bureaucracy. *Organization Theory: From Chester Barnard to the Present and Beyond.* O. Williamson, ed., pp. 116–153. New York: Oxford University Press.

Molenaar, Keith; Sencer, Justin; et al. 2003. *Washington State DOT Design–Build Pilot Project Evaluation: A Measurement of Performance for the Process Cost, Time, and Quality.* University of Colorado and Washington State Department of Transportation.

North, Douglass. 1981. *Structure and Change in Economic History.* New York: W.W. Norton & Company.

North, Douglass. 1990. *Institutions, Institutional Change and Economic Performance.* Cambridge: Cambridge University Press.

North, Douglass. 2005. *Understanding the Process of Economic Change.* Princeton University Press.

Nossaman, Guthner, Knox & Elliot, LLP. 2006. *50-State Survey of Transportation Agency Design–Build Authority*.

Perrow, Charles. 1986 [1972]. *Complex Organizations: A Critical Essay.* New York: McGraw-Hill.

Polanyi, Karl. 1944. *The Great Transformation: The Political and Economic Origins of Our Time.* Beacon Hill: Beacon Press.

Roberts, Peter, & Greenwood, Royston. 1997. Integrating Transaction Cost and Institutional Theories: Toward a Constrained-Efficiency Framework for Understanding Organizational Design Adoption. *The Academy of Management Review* 22(2):346–373.

Rosenberg, Nathan. 1976. *Perspectives on Technology.* Cambridge: Cambridge University Press.

SAIC; AECOM Consult; et al. 2006. *Design–Build Effectiveness Study: As Required by TEA-21 Section 1307(f).* Washington, D.C.: US Department of Transportation, Federal Highway Administration.

Sanvido, Victor, & Konchar, Mark. 1999. *Selecting Project Delivery Systems: Comparing Design–Build, Design–Bid–Build and Construction Management at Risk.* State College, PA: The Project Delivery Institute.

Shelanski, Howard, & Klein, Peter. 1995. Empirical Research in Transaction Cost Economics: A Review and Assessment. *Journal of Law, Economics, and Organization* 11(October):335–361.

Simon, Herbert. 1945. *Administrative Behavior: A Study of Decision-Making Processes in Administrative Organizations.* New York: The Free Press.

Simon, Herbert. 1957. *Models of Man.* New York: John Wiley & Sons.

Smith, Adam. 1937 [1789]. *An Inquiry into the Nature and Causes of The Wealth of Nations.* New York: The Modern Library.

Stigler, George. 1971. The Theory of Economic Regulation. *The Bell Journal of Economics and Management Science* 2(1):3–21.

Troesken, Werner. 1997. The Sources of Public Ownership: Historical Evidence from the Gas Industry. *Journal of Law, Economics and Organization* 13(1):1–25.

Troesken, Werner. 2001. Race, Disease, and the Provision of Water in American Cities, 1889–1921. *The Journal of Economic History* 61(3):750–776.

US Federal Highway Administration. 2000. *Briefing on FHWA Innovative Contracting Practices, Special Experimental Project 14 (SEP-14) Innovative Contracting.* From www.fhwa.dot.gov.

Warne, Thomas. 2003. *NCHRP Synthesis 313: State DOT Outsourcing and Private-Sector Utilization.* Washington, DC: National Research Council, Transportation Research Board.

Washington State Department of Transportation. 2005. *What Gets Measured, Gets Managed.* From www.wsdot.wa.gov/accountability/graynotebook/.

Williamson, Oliver. 1975. *Markets and Hierarchies: Analysis and Antitrust Implications.* New York: The Free Press.

Williamson, Oliver. 1985. *The Economic Institutions of Capitalism.* New York: The Free Press.

Williamson, Oliver. 1996. *The Mechanisms of Governance.* New York: Oxford University Press.

Williamson, Oliver. 1999. Public and Private Bureaucracies. *The Journal of Law, Economics & Organization* 15(1):306–342.

Williamson, Oliver, & Masten, Scott, eds. 1999. *The Economics of Transaction Costs.* London: Edward Elgar Publishing, Ltd.

Winter, Sidney. 1993. On Coase, Competence, and the Corporation. *The Nature of the Firm: Origins, Evolution, and Development.* O. Williamson and S. Winter, eds., pp. 179–195. New York: Oxford University Press.