ECONSTOR
Make Your Publications Visible.

A Service of
ZBW
Leibniz-Informationszentrum Wirtschaft
Leibniz Information Centre for Economics

Kularbphettong, K.; Boonseng, C.

Article

HPFs filtering solutions for reduced the harmonic current generated by SMPS and ac drive systems

Energy Reports

Provided in Cooperation with:
Elsevier

Suggested Citation: Kularbphettong, K.; Boonseng, C. (2020) : HPFs filtering solutions for reduced the harmonic current generated by SMPS and ac drive systems, Energy Reports, ISSN 2352-4847, Elsevier, Amsterdam, Vol. 6, Iss. 2, pp. 648-658, https://doi.org/10.1016/j.egyr.2019.11.133

This Version is available at:
https://hdl.handle.net/10419/243946

Standard-Nutzungsbedingungen:

Die Dokumente auf EconStor dürfen zu eigenen wissenschaftlichen Zwecken und zum Privatgebrauch gespeichert und kopiert werden.

Sie dürfen die Dokumente nicht für öffentliche oder kommerzielle Zwecke vervielfältigen, öffentlich ausstellen, öffentlich zugänglich machen, vertreiben oder anderweitig nutzen.

Sofern die Verfasser die Dokumente unter Open-Content-Lizenzen (insbesondere CC-Lizenzen) zur Verfügung gestellt haben sollten, gelten abweichend von diesen Nutzungsbedingungen die in der dort genannten Lizenz gewährten Nutzungsrechte.

Terms of use:

Documents in EconStor may be saved and copied for your personal and scholarly purposes.

You are not to copy documents for public or commercial purposes, to exhibit the documents publicly, to make them publicly available on the internet, or to distribute or otherwise use the documents in public.

If the documents have been made available under an Open Content Licence (especially Creative Commons Licences), you may exercise further usage rights as specified in the indicated licence.

https://creativecommons.org/licenses/by-nc-nd/4.0/

WWW.ECONSTOR.EU

Mitglied der Leibniz-Gemeinschaft

Available online at www.sciencedirect.com
ScienceDirect

Energy Reports 6 (2020) 648–658

www.elsevier.com/locate/egyr

The 6th International Conference on Power and Energy Systems Engineering (CPESE 2019), September 20–23, 2019, Okinawa, Japan

HPFs filtering solutions for reduced the harmonic current generated by SMPS and ac drive systems

K. Kularbphettong[a], C. Boonseng[b,*]

[a] Department of Computer Programs, Faculty of Science and Technology, Suan Sunandha Rajabhat University, Bangkok, Thailand
[b] Department of Electrical Engineering, Faculty of Engineering, King Mongkut's Institute of Technology Ladkrabang, Bangkok, Thailand

Received 8 October 2019; accepted 23 November 2019

Abstract

This paper proposes a reduced 2nd, 3rd, 5th and 7th harmonic current of all power supply units and ac drives which effects of heating neutral cables and transformer. The commercial or automation building require the operation of many parallel-connected switch mode power supply and ac drive on the same bus and transformer. Such a system significantly increases the high neutral current and power quality problems on the distribution network. The existing system mainly consists of switch mode power supply and a three phase ac drive for compressor loads (common to HVAC applications). A passive power filter (PPF) and a low rating APF (Active Power Filter) at point of common coupling (PCC) are used to power quality enhancement in the distribution system. A PPF is designed to reduce the harmonics and to compensate the reactive power in the distribution system and the APF located at an upstream position near main distribution broads (MDB), it performs the compensation for harmonic current which is produced from all of drive and for remaining harmonics after the PPFs can been operation. The Hybrid Power Filter System (HPFs) is the combination of PPF and APF which mostly use for reducing harmonic currents and improving power quality of the system. Finally, using the HPFs to solve this problem, the results can reduce distortion and neutral current.
© 2019 Published by Elsevier Ltd. This is an open access article under the CC BY-NC-ND license (http://creativecommons.org/licenses/by-nc-nd/4.0/).

Peer-review under responsibility of the scientific committee of the 6th International Conference on Power and Energy Systems Engineering (CPESE 2019).

Keywords: Harmonic current; HPFs; APFs; PPFs; Power quality

1. Introduction

The modern office is brimming with electronic appliances that draw non-sinusoidal currents. These nonlinear plug-in appliances include personal computers, printers, monitors, fax machines, and photocopiers. Nonlinear equipment such as fluorescent lamps with electronic ballasts and high-efficiency HVAC (heating, venting, and air-conditioning) systems with ac drives are also sources of harmonic currents in commercial building. Although most electronic appliances are energy-efficient, they typically have a low power factor when all the harmonic frequencies

* Corresponding author.
E-mail address: chongrag.bo@kmitl.ac.th (C. Boonseng).

https://doi.org/10.1016/j.egyr.2019.11.133
2352-4847/© 2019 Published by Elsevier Ltd. This is an open access article under the CC BY-NC-ND license (http://creativecommons.org/licenses/by-nc-nd/4.0/).

Peer-review under responsibility of the scientific committee of the 6th International Conference on Power and Energy Systems Engineering (CPESE 2019).

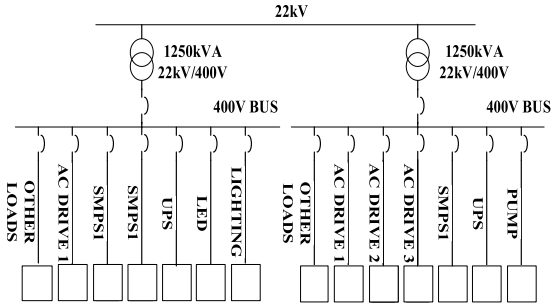

Fig. 1. Single line diagram of existing system.

are taken into accounts. The resulting harmonic currents increase the amps per watt drawn by electronic appliances. An abundance of harmonic current, coupled with a high demand load and heavy plug loads, may consume any spare current-carrying capacity designed into the building transformers and conductors. As shown in Fig. 1, the current drawn by single-phase electronic appliances is typically rich in third harmonic. The presence of even numbered harmonics is not at all typical and indicates either a malfunction of the appliance which should be identified and removed or replaced or an appliance with a halfwave rectifier such as an electric hand tool. The relative power consumption of the electronic appliance and the percent of total harmonic distortion (THD) determine how much the appliance contributes harmonic current to the building wiring system. While some office loads may have a high percent of distortion, the actual amount of harmonic current they contribute to the building wiring may be insignificant [1,2]. In this paper, focusing on solving problems by installing a HPFs can increase the power factor and reduce the harmonic current and distortion as well as use the computer to calculate as show in Fig. 2. Finally, can solve the problem of resonance according to the needs of the automation building.

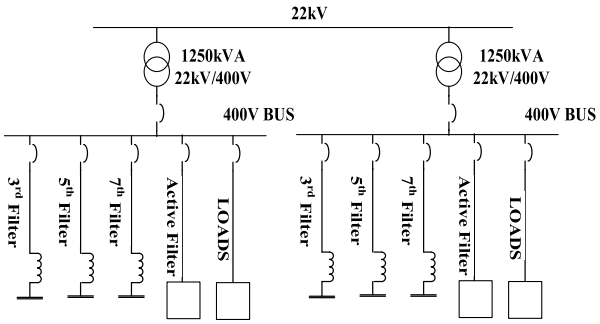

Fig. 2. Single line diagram of existing system with HPFs.

2. Harmonic generation

2.1. Harmonic generated by SMPS

Because the SMPS has become the standard computer power supply, they are found in large quantities in commercial buildings. Acting together, the multitude of SMPS units can badly distort what started out as a sine wave voltage and current waveform. The SMPS is not without its downside, however. The operation of the diode bridge and accompanying smoothing capacitor is very non-linear in nature. That is, it draws current in non-sinusoidal pulses at the peak of the voltage waveform as see in Fig. 3(a) and (b). This non-sinusoidal current waveform is very rich in 2nd, 3rd, 5th and 7th harmonic currents.

2.2. Harmonic generated by ac drives [2]

This article focuses on the largest share of power electronic loads in today's buildings, ac drives, which are a form of power electronics used to vary the speed of the motor they serve. Globally speaking, motors account for more

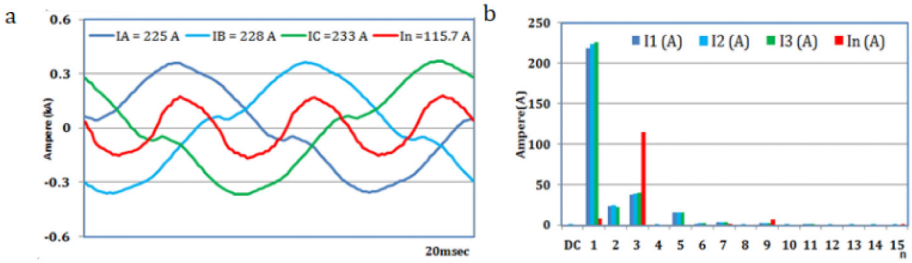

Fig. 3. Waveform and spectrum of harmonic current for SMPS.

than two-thirds of electricity consumed by the industrial sector, and also for nearly 50% of all electricity consumed by commercial buildings. This is significant when one considers that 75% of motor applications are variable torque fan, pump, and compressor loads (common to HVAC applications) that can greatly benefit in reducing energy consumption by employing ac drives. The ac drive is an important source of harmonics in the system and affects the electrical system as seen in Fig. 4(a) and (b).

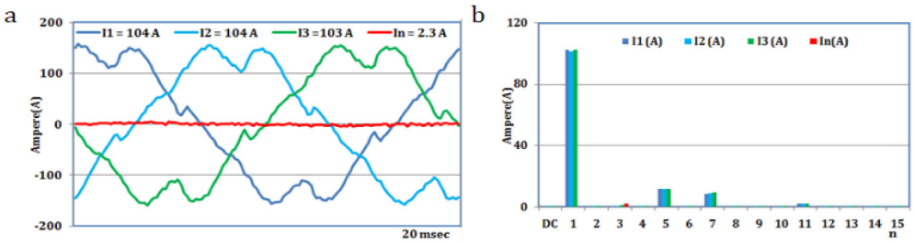

Fig. 4. Waveform and spectrum of harmonic current for ac drive.

2.3. Harmonic generated by UPS

The main purpose of the converter section of the UPS is to convert the ac utility power to dc power. The amount of harmonics can vary greatly, depending on the type of converter. The most popular power electronics used for this process are the insulated-gate bipolar transistor (IGBT). The harmonic currents and waveforms can be generated from UPS with IGBT switching as seen in Fig. 5(a) and (b).

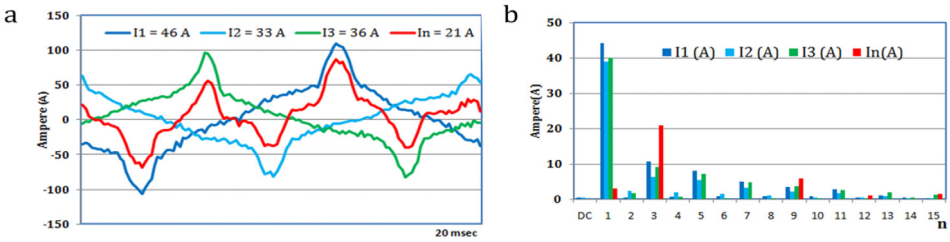

Fig. 5. Waveform and spectrum of harmonic current for UPS.

2.4. Harmonic generated by single phase power supply (SPPS)

In PWM rectifier the power factor and THD has improved by replacing the diodes by switches and by controlling the pulses given to these switches. Today, insulated gate bipolar transistors are typical switching devices. The current drawn by single-phase electronic appliances is typically rich in third harmonic as seen in Fig. 6(a) and (b).

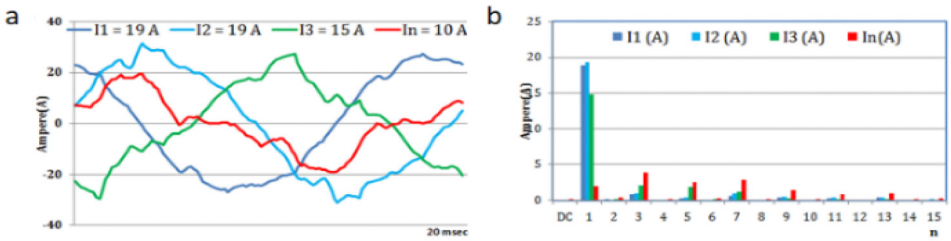

Fig. 6. Waveform and spectrum of harmonic current for SPPS.

3. Research methodology

To measure the load characterization under different supply locations, an instrument Movolog Pro PQ analyzer by GOSSEN, Metrel power meter and Fluke 435 which power quality class A was used. The instrument also had a harmonics measurement module that was used to obtain the consumed current spectrum for the load under different test conditions. In order to carry out the test, it was necessary to establish a wide range of harmonic voltage and current measurements. The testing procedures were set as follows [1–3]:

- Monitor existing values of harmonics and check against recommended levels
- Identify equipment that generates harmonics
- Observe existing background levels and track the trends of voltage and current harmonics (daily)
- Make measurements with and without nonlinear loads connected, and determine the harmonic driving point impedance at given locations.

4. Hybrid filter configurations

Several filter configurations are available to the electrical filter designer. The HPFs is combination of the passive-shut or Passive Power Filter (PPF) and Active-shut filter or Active Power Filter (APF), which can be very easy for limit harmonic voltage and currents of the system as show in Fig. 7.

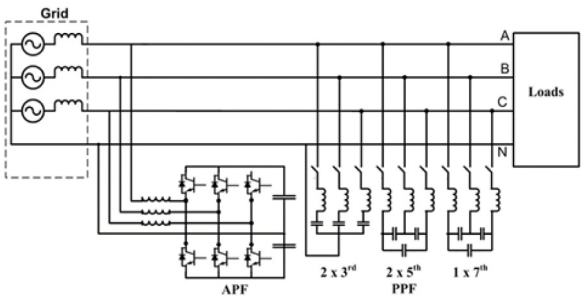

Fig. 7. The HPFs configuration.

4.1. HPFs configuration

Conventionally, the PPFs are used to eliminate line current harmonics and to increase the loads power factor due to its very low cost. In order to solve harmonic problem and power factor from the loads, the PPFs are recommended. The 3rd, 5th filter and 7th filter can be used. The target power factor is unity. The APF is emerged as an alternative solution for power quality problem from converters. In this, the PPFs are filtering the predominant harmonics and anti parallel resonance in the system (must been expert designer) [6]. After the PPFs installation, the 3rd, 5th and 7th harmonic currents are reduced. Hence the capacity of the shut APF is smaller than that of the parallel APF for the same non-linear loads. As a result, the HPF is suitable for high power applications [7,8].

4.2. HPFs operation principle

In operation, PPFs compensate for the major harmonics at the position near the loads. Therefore, the harmonic flow is limited and the harmonic impacts, such as malfunction of sensitive equipment, burnt of electronic component and increase in power loss, are effectively reduced. The APF is located at an upstream position near solar inverters, perform the compensation for harmonic current that produced from converters and for remaining harmonics after the PPFs can been operation.

5. Filter designs

5.1. Passive power filter designs

The PPFs design criteria must be respected from reactive power demand of the system.

$$Q_{System} = Q_{Filter} \tag{1}$$

Q_{System} : Total reactive power from measurement
Q_{Filter} : Total reactive power to be supplied by the filter

$$Q_{System} = Q_{F1} + Q_{F2} + Q_{F3} + \cdots + Q_{Fn} \tag{2}$$

$$n : branch\ of\ \ filter$$

$$Q_{F1} = Q_{F2} = Q_{F3} = Q_{Fn} \tag{3}$$

$Q_{F1}, Q_{F2}, Q_{F3}\ and\ \ Q_{Fn}$: Reactive power of each branch

A number of configurations discussed earlier are investigated, but could not be developed commercially because of cost and complexity. They always have a simple structure, low cost and high reliability. In addition to absorb harmonic basis, they can also compensate reactive power, improve power factor. In addition, the frequency of short-capacity power supply is sensitive and influenced by load fluctuations. The property of a filter depends on grid parameter, which changes along with the impedance and resonant frequency of short-capacity operation condition. Thus, it is difficult to design an LC network for short-capacity grid. This problem can be solved and the design of power factor approach to unity. Its expression of the impedance for the nth harmonic is [4,9];

$$Z_n = R + j(\omega_n L - \frac{1}{\omega_n C}) \tag{4}$$

The PPFs is designed based on reactive power and harmonic contents of voltage and current obtained either from actual measurement data at harmonic source. In designing a filter the simplest possible construction is aimed at which will satisfy the requirements for reactive power compensation and filtering and will be economically priced. The most of data have a large percentage of distortion at 3rd, 5th, and 7th harmonics frequency. Therefore, the 3rd, 5th and 7th filters are designed to eliminate these harmonics as shown in Fig. 8.

Passive Power Filter Calculation Sheet
by Dept. of Electrical Engineering
Faculty of Engineering, KMITL

Filter Performance

Filter	Designs	kVAR	kV	%
Filter	Banks	50	0.4	4.0%
fr/Hz	250			
n	5.00			
k	1.04			
Cp/uF	994.72			
Lreactor/mH	0.41			

Reactor and System

f/Hz	Ith/A	Xc	XL	Xtot	Uth	Ireactor/A	Uunit/V	Ubank/V
50	79	3.20	0.13	3.07	254	79	254	440
100	0	0.22	0.08	0.14	0	0	0	0
150	200	0.13	0.13	0.00	27	200	27	46
250	0	0.10	0.19	0.09	0	0	0	0
350	0	0.06	0.29	0.23	0	0	0	0
550	0	0.09	2.62	2.53	0	0	0	0
						267	254	486

Capacitor Banks

Qc 1ph kVAR	Qc 3ph kVAR	Selected Uc V
28.71	86.13	525

Fig. 8. The 80kVAR 5th filter design for HPFs [4,5].

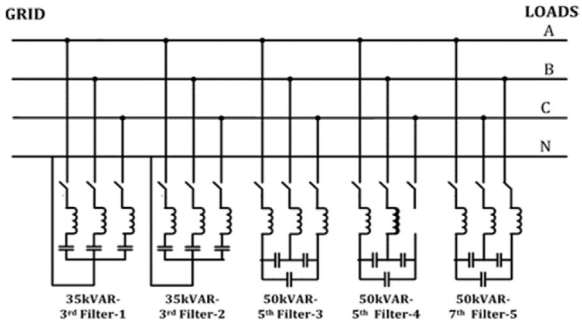

Fig. 9. A single line diagram for this system with PPFs.

The harmonic filters tuned to 150, 250 and 350 Hz, which consists of five branches of 220kVAR for reactive compensation. The number of filter branches can be selected based on the percentage of the harmonic of voltage, current and current value. For low voltage, it is recommended to use single tuned filters because of low cost and high reliability. This paper recommended the PPF as independent short-capacity grid filtering and be able to keep power factor approach to unity. The steady state analysis of PPF are performed using KMITL programs, which was developed by Department of Electrical Engineering, KMITL [4,5]. A single line diagram for this system with PPF is shown in Fig. 9. The harmonic and power quality problems can be controlled using a number of different methods. However, the PPFs are preferable in terms of convenience, flexibility, highly reliability, low cost and low maintenance. It can be easily integrated in to the power electronic systems. Estimated electrical parameters after the PPFs installation are calculated as shown in Table 1.

Table 1. Estimate electrical parameter after the PPFs installation.

MDB	TR (kVA)	%THDv	%THDi	kVAR	P.F.	Ifmax (A)	I2 (A)	I3 (A)	I5 (A)	I7 (A)
MDB1	1250	1.1	6	10	0.99	650	35	35	20	15
MDB2	1250	1.1	6	10	0.99	690	0	15	20	15

5.2. Active power filter designs

Currently, an effective way for harmonic elimination is the harmonic compensation by using passive and active filter. The APF basically works by detecting the harmonic from power line, and injecting equal-but-opposite harmonic component into the power line for compensating the harmonics. The following equation results to the total harmonics current (I_{TH}) generally:

$$I_{TH} = \sqrt{\sum_{i=2}^{\infty} I_i^2} = \sqrt{I_2^2 + I_3^2 + I_4^2 + \cdots + I_\infty^2} \tag{5}$$

The following dimensioning equation takes in account the active filter limitation $\partial i/\partial t$

$$I_{THC} = \sqrt{\sum_{i=2}^{\infty} [i_i + i_i(i-1).5\%]^2} \tag{6}$$

$$I_{THC} = \sqrt{(I_2 + I_{2.}.5\%)^2 + (I_3 + I_3.10\%)^2 + \cdots + \cdots} \tag{7}$$

$$I_{THC_peak} = I_2 + I_3 + I_4 + \cdots I_n \cdots + I_{25} \tag{8}$$

Thus, using currents value at MDB1 in Table 1 and the 2nd, 3rd, 5th and 7th harmonic current which generated from converter around 35, 35 A, 20 A and 15 A, respectively at 400 V into Eqs. (7) and (8). The total harmonic

current for compensation (I_{THC}) and peak (I_{THC_peak}) would be 55.45 A and 105 A respectively and MDB2, the total harmonic current for compensation (I_{THC}) and peak (I_{THC_peak}) would be 29.15 A and 50 A respectively. The rating of active filter for each transformer is approximate about 100 A for rms current, 150 A for peak current and 300 A for neural current.

6. Results

The proposed harmonic filters were implemented and tested as seen in Fig. 10. The equipment has been inspected and tested accordance with the technical specifications and they were found to meet all requirements stated. The PPF passed the test and inspection without remark. In this case MDB1, the I_{SC} and IL are equal to 21 kA and 650 A respectively. Consequently, the value of $I_{SC}/I_L = 32.1$ and MDB2, the I_{SC} and IL are equal to 21 kA and 690 A respectively. Consequently, the value of $I_{SC}/I_L = 32.2$, corresponding to limits at 8%. The HPFs that designed filter configuration complies with the IEEE 519–1992 standard.

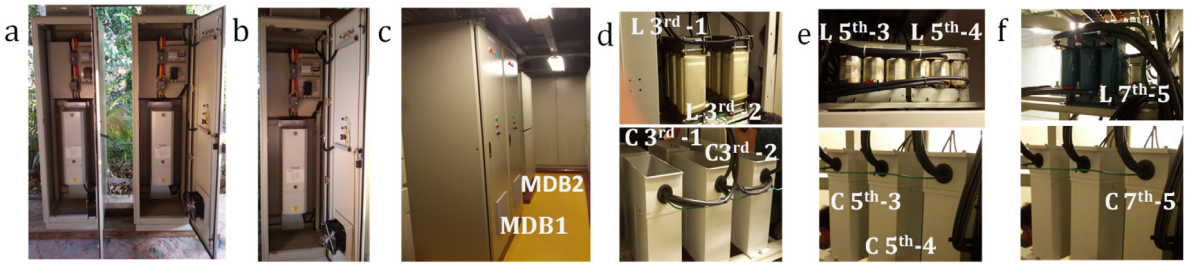

Fig. 10. (a) two active filter; (b) active filter without cover; (c) layout (d) 3rd-PPFs1&2 (e) 5th-PPFs 3 & 4 (f) 7th-PPFs-5.

6.1. Harmonic and spectrum at MDB1

At MDB1, there is an electrical load that is the SPPS and SMPS will be the 3rd harmonic current, affecting the operation of electrical and electronic equipment, causing heat and overcurrent in the neutrals and problems for devices that respond quickly to unqualified electrical systems due to current and voltage harmonics, such as unbalance current and voltage caused between neutrals and ground. From the results of the test, the number of harmonic currents has occurred since the 2nd–9th order can reduce %THDi to be lower than 3.1%, as shown in Fig. 11, therefore results in %THDv being able to control below 1 as shown in Fig. 12. After the HPFs are installed, the waveform of the voltage and current is comparable to the sine signal as shown in Figs. 13 and 14. Normally do not have to reduce the %THD value as low as this. But this building has an enormous amount of electronic equipment, so it is necessary to maintain the best quality of electricity.

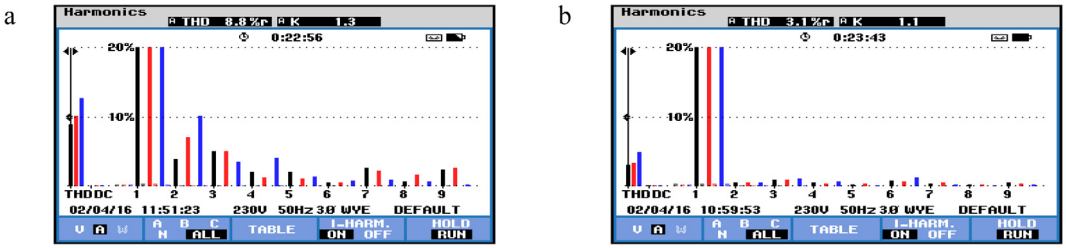

Fig. 11. Spectrum current (a) without HPFs; (b) with HPFs.

6.2. Harmonic and spectrum at MDB2

At MDB2, there is an electrical load that is the ac drive and SMPS will be the 3rd, 5th and 7th harmonic current, affecting the operation of electrical and electronic equipment, causing heat and overcurrent in the neutrals and problems for devices that respond quickly to unqualified electrical systems due to current and voltage harmonics, such as unbalance current and voltage caused between neutrals and ground. An HVAC ac drive provides the amount

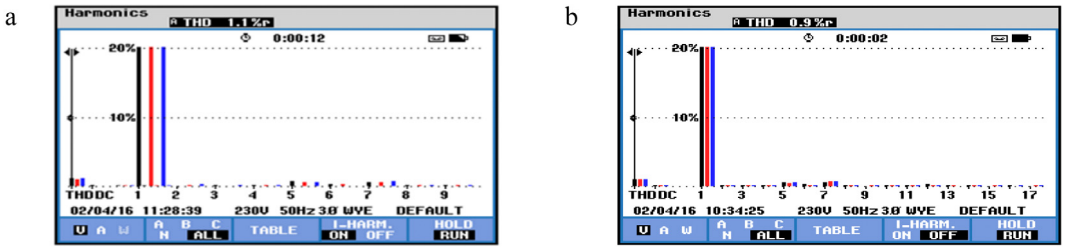

Fig. 12. Spectrum voltage (a) without HPFs; (b) with HPFs.

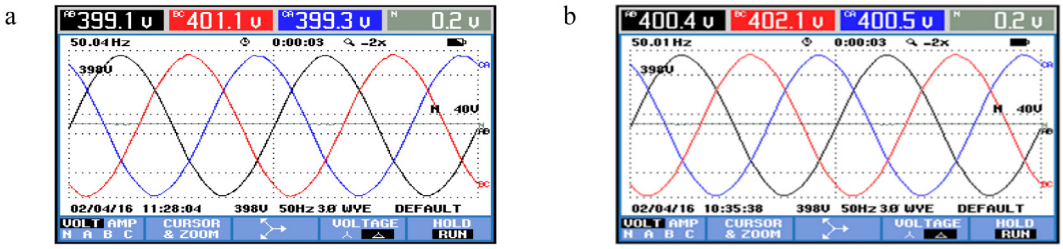

Fig. 13. Waveform of voltage (a) without HPFs; (b) with HPFs.

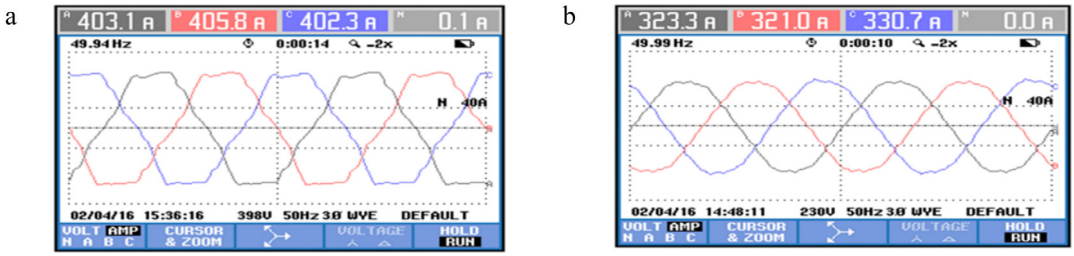

Fig. 14. Waveform of current (a) without HPFs; (b) with HPFs.

of energy needed to handle the instantaneous load of the heating or cooling system. Without a ac drive, the air of an HVAC is system is controlled by throttling an inlet vane or braking an outlet damper. A better way to control the airflow is using a ac drive that continuously regulates motor speed. When air needs are low, the ac drive will use less energy. For example, when an HVAC system requires 50% airflow, the ac drive uses 21% of full airflow energy, whereas an inlet vane control will use 65% of full airflow energy and an outlet damper control will use 87% of full airflow energy. When there is an objective to save electricity, it is necessary to have an ac drive. But there is unfortunate that using an ac drive often has harmonics, affecting the resonance in the system. There is a need to attach a filter to prevent resonance. From the results of the test, the number of harmonic currents has occurred since the 2nd–9th order can reduce %THDi to be lower than 3.1%, as shown in Fig. 15, therefore results in %THDv being able to control below 1 as shown in Fig. 16. After the HPFs are installed, the waveform of the voltage and current is comparable to the sine signal as shown in Figs. 17 and 18.

6.3. The grid current quality

For grid-connected applications, the %THDi is generally limited to below 5%. If using PPF alone, the result of the harmonic current will not meet the requirements or more than 5%. In general, if using PPF alone, %THDi will be at 7%–11% and cannot control the %THDi level to below 5%. Advantages of PPFs Is able to increase the power factor and can maintain the %THDv level according to the target set easier. As for the use of APF, the current level can be controlled to be less than 5%, but there is no good stability for some time, often stop working on their own or trip when having to enter high current continuously and most importantly, the price is very high. When

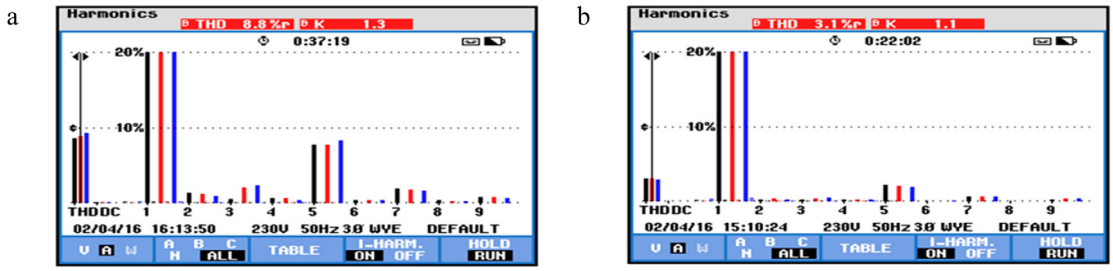

Fig. 15. Spectrum current (a) without HPFs; (b) with HPFs.

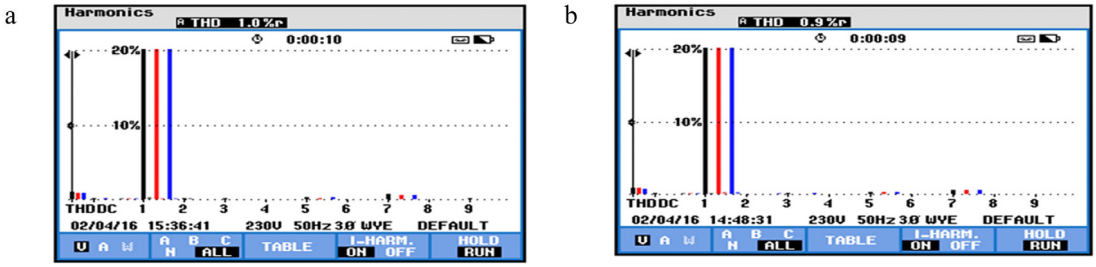

Fig. 16. Spectrum voltage (a) without HPFs; (b) with HPFs.

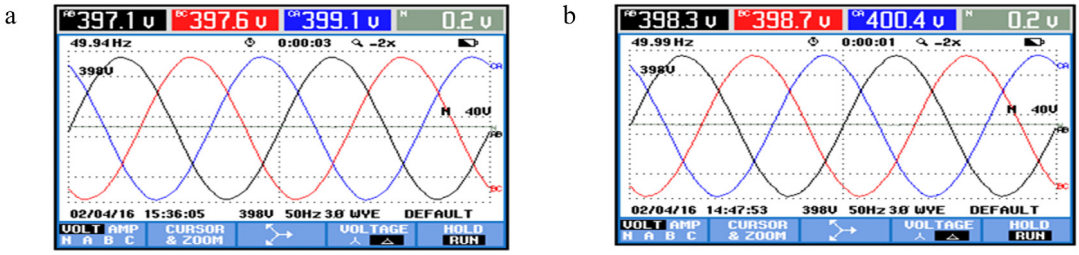

Fig. 17. Waveform of voltage (a) without HPFs; (b) with HPFs.

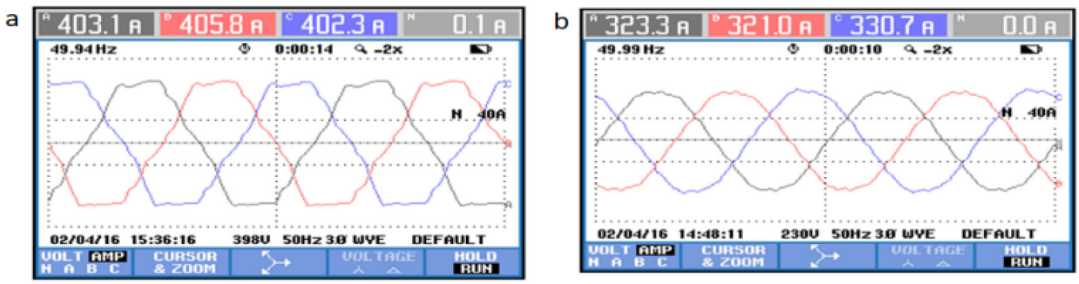

Fig. 18. Waveform of current (a) without HPFs; (b) without HPF.

both systems are used together, they can be used to be very high quality, able to control both the power factor and %THDi as required, therefore the source of sharing between PPF and APF. The author uses this system to solve problems caused by harmonic not less than 50 factories. For both transformers, they can reduce the level of %THDi by less than 3.1% and %THDv can be less than 1%.

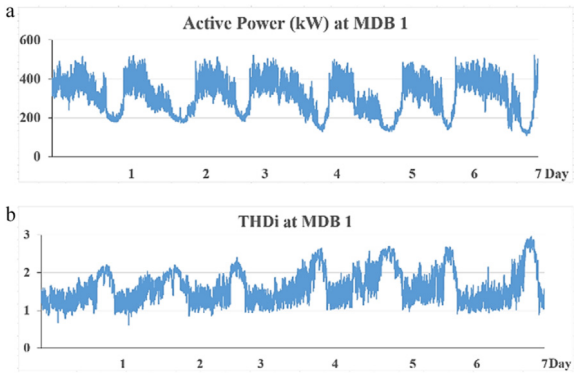

Fig. 19. Measured active power(a) and %THDi (b) of the transformer at MDB1, as a function of time.

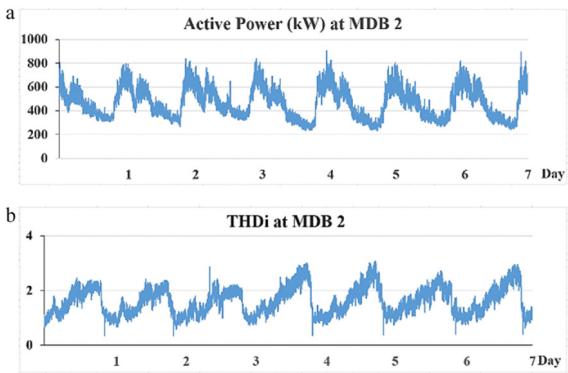

Fig. 20. Measured active power(a) and %THDi (b) of the transformer at MDB2, as a function of time.

7. Discussions

From monitoring and performance tracking after installing a harmonic current filter circuit with HPFs, it can be used well without causing problems for the electrical system due to the ability to control the load and the harmonic current to the design level.

7.1. Maximum loads and harmonic generation

The load curve in Figs. 19(a) and 20(a) of MDB1 and MDB2 confirm that throughout the 7 days are the same and there is no reason to increase the harmonic current level due to load. Data recording will be done every 1 s throughout this period. Assuming that there is an increase in the harmonic current level due to the actual load in a short period of time, it can solve the problem due to the design and operation of the APFs has prepared current 150% compensation for 1 min, can cover all systems. From the three years of use, there is no significant effect on this, so it can be realized that it can actually be used. The %THDi in Figs. 19(b) and 20(b) of MDB1 and MDB2 confirm that throughout the 7 days are the same and its can be confirm that HPFs maintain a good level of harmonic current removal and are in compliance with the IEEE 519 standard.

7.2. Harmonics limitation

The proposed harmonic filters were implemented and tested. The equipment has been inspected and tested in accordance with the technical specifications and they were found to meet all requirements stated. The HPFs passed the test and inspection without remark. In this case, the value of $I_{SC}/I_L = 32$, corresponding to limits at 8%. The HPFs that designed filter configuration complies with the IEEE 519–1992 standard is shown in Tables 2 and 3.

Table 2. Current distortion limits for general distribution system In IEEE 519-1992 standard (120 V through 69,000 V).

Isc/IL	<11	11 ≤ h < 17	17 ≤ h < 23	23 ≤ h < 35	h ≤ 35	TDD
<20	4.0	2.0	h	0.6	0.3	5.0
20 < 50	7.0	3.5	2.5	1.0	0.5	8.0
50 < 100	10.0	4.5	4.0	1.5	0.7	12.0
100 < 1000	12.0	5.5	5.0	2.0	1.0	15.0
>1000	15.0	7.0	6.0	2.5	1.4	20.0

where:
Isc = maximum short-circuit current at PCC.
IL = maximum demand load current (fundamental frequency component) at PCC.

Table 3. Evaluation harmonic and HPFs design results (%).

Harmonic order	%Harmonic current												IEEE 519
	MDB1 without HPFs			MDB1 with HPFs			MDB2 without HPFs			MDB2 with HPFs			%Harmonic current
	A	B	C	A	B	C	A	B	C	A	B	C	
2nd	4.3	**7.3**	**10.5**	0.5	0.6	0.7	1.7	1.5	1.2	0.5	0.6	0.6	7.0
3rd	5.2	5.2	4.6	1.0	1.0	1.0	1.4	2.7	2.6	1.0	1.0	1.0	7.0
5th	2.5	1.8	2.1	0.2	0.9	0.2	**7.5**	**8.3**	**8.8**	0.2	0.2	0.2	7.0
7th	2.4	2.8	2.6	0.3	0.6	0.3	2.1	2.1	2.0	0.3	0.6	0.3	7.0
11th	1.0	2.2	1.0	0.2	0.6	0.1	1.7	1.7	1.5	0.2	0.6	0.1	3.5
13th	1.0	1.0	1.0	0.3	0.7	0.7	1.5	1.6	1.3	0.7	0.7	0.7	3.5
17th	1.5	1.5	2.0	0.2	1.0	1.0	1.1	1.2	1.9	1.0	1.0	1.0	2.5
19th	1.0	1.0	1.0	0.2	0.2	0.6	0.5	0.4	0.7	0.2	0.2	0.2	2.5
23th	1.2	1.2	1.7	0.3	0.1	0.1	0.7	0.5	0.3	0.3	0.1	0.7	1.0
25th	0.2	0.2	0.2	0.1	0.0	0.0	0.5	0.3	0.5	0.1	0.1	0.1	1.0
TDD	**8.8**	**10.3**	**13.5**	3.1	3.2	3.1	**8.6**	**8.8**	**9.4**	3.0	3.1	2.8	8.0

8. Conclusions

When all filter was connected on the THD of currents decreased less than 3.2% both of MDB1 and MDB2. The power factor approach to unity which are considered to be very good value for low and medium supply system. Also, harmonic current has been absorbed effectively and supply current met the specified harmonic limits. The HPFs are working 3 years ago, the problems such as exceed neutral current, power quality and harmonic resonance can be improved. HPFs can control the unbalance current and 3rd harmonic current in neutral winding so they do not appear in the system.

References

[1] Okelola MO, Ajenikoko Ganiyu Adedayo. Investigation of total harmonic distortion: a case study of some office equipment. Int J Adv Sci Tech Res 2018;8.
[2] Chan Ming-Yin, Lee Ken KF, Fung Michael WK. A Case study survey of harmonic currents generated from a computer centre in an office building. Archit Sci Rev 2017;50(3):407–22.
[3] Jawad Ghorbani M, Mokhtari H. Impact of harmonics on power quality and losses in power distribution systems. Int J Electr Comput Eng (IJECE) 2015;5(1):166–74.
[4] Das JC. Passive filters-potentialities and limitations. IEEE Trans Ind Appl 2004;40(1).
[5] Nassif AB, Xu W, Freitas W. An investigation on the section of filter topologies for passive filter applications. IEEE Trans Power Deliv 2009;24(3):1710–8.
[6] Boonseng C, Kinnares V, Khan-ngan W. An implementation of harmonic filter installations for improved quality and reduced voltage and current distortion in UPS system. In: IPEC'99 international power engineering conference, Vol. 2. 1999.
[7] Makram EB, Subramaniam EV, Girgis AA, Catoe RC. Harmonic filter design using actual record data. IEEE Trans Ind Appl 1993;29(6).
[8] Boonseng C. Harmonic filter designs for AC & DC drive and applications. SCG for paper report 2015, 2015.
[9] Moran L, Albistur CA, Burgos R. Multimega VAR passive filters for mining applications: Practical limitations and technical considerations. IEEE Trans Ind Appl 2016;52(6):5310–7.