ECONSTOR
Make Your Publications Visible.

A Service of
ZBW
Leibniz-Informationszentrum Wirtschaft
Leibniz Information Centre for Economics

Erol, Selman; Lee, Michael Junho

Working Paper

Insider networks

Staff Report, No. 862

Provided in Cooperation with:
Federal Reserve Bank of New York

Suggested Citation: Erol, Selman; Lee, Michael Junho (2018) : Insider networks, Staff Report, No. 862, Federal Reserve Bank of New York, New York, NY

This Version is available at:
https://hdl.handle.net/10419/210714

Standard-Nutzungsbedingungen:

Die Dokumente auf EconStor dürfen zu eigenen wissenschaftlichen Zwecken und zum Privatgebrauch gespeichert und kopiert werden.

Sie dürfen die Dokumente nicht für öffentliche oder kommerzielle Zwecke vervielfältigen, öffentlich ausstellen, öffentlich zugänglich machen, vertreiben oder anderweitig nutzen.

Sofern die Verfasser die Dokumente unter Open-Content-Lizenzen (insbesondere CC-Lizenzen) zur Verfügung gestellt haben sollten, gelten abweichend von diesen Nutzungsbedingungen die in der dort genannten Lizenz gewährten Nutzungsrechte.

Terms of use:

Documents in EconStor may be saved and copied for your personal and scholarly purposes.

You are not to copy documents for public or commercial purposes, to exhibit the documents publicly, to make them publicly available on the internet, or to distribute or otherwise use the documents in public.

If the documents have been made available under an Open Content Licence (especially Creative Commons Licences), you may exercise further usage rights as specified in the indicated licence.

WWW.ECONSTOR.EU

Mitglied der Leibniz-Gemeinschaft

Federal Reserve Bank of New York
Staff Reports

Insider Networks

Selman Erol
Michael Junho Lee

Staff Report No. 862
August 2018

This paper presents preliminary findings and is being distributed to economists and other interested readers solely to stimulate discussion and elicit comments. The views expressed in this paper are those of the authors and do not necessarily reflect the position of the Federal Reserve Bank of New York or the Federal Reserve System. Any errors or omissions are the responsibility of the authors.

Insider Networks
Selman Erol and Michael Junho Lee
Federal Reserve Bank of New York Staff Reports, no. 862
August 2018
JEL classification: D85, G14, G20

Abstract

This paper develops a model to study the formation and regulation of information transmission networks. We analyze a cat and mouse game between a regulator, who sets and enforces a regulatory environment, and agents, who form networks to disseminate and share insider information. For any given regulatory environment, agents adapt by forming networks that are sufficiently complex to circumvent prosecution by regulators. We show that regulatory ambiguity arises as an equilibrium phenomenon—regulators deliberately set broad regulatory boundaries in order to avoid explicit gaming by agents. As a response, we show that agents form a core-periphery network, with core members acting as conduits of information on behalf of their stakeholders, effectively intermediating all transmissions of information within the network.

Key words: network formation, insider trading, regulatory ambiguity, endogenous intermediation

---

Lee: Federal Reserve Bank of New York (email: michael.j.lee@ny.frb.org). Erol: Carnegie Mellon University (email: erol@cmu.edu). The authors thank Nicola Cetorelli, Marco Cipriani, Gabriele La Spada, Marco Di Maggio, and Omer Tamuz for helpful comments. The views expressed in this paper are those of the authors and do not necessarily reflect the position of the Federal Reserve Bank of New York or the Federal Reserve System.

To view the authors' disclosure statements, visit
https://www.newyorkfed.org/research/staff_reports/sr862.html.

1 Introduction

From 1928 to 1932, Albert H. Wiggin, then president of the Chase National Bank, accumulated over $10,000,000 solely by trading Chase National Bank stock. $4,000,000 was made in the Crash of 1929, during which the stock market crashed, and with it, Chase National Bank as well. Wiggin had been shorting his own bank. Wiggin's trades were as legal as they were met with public outrage. In an effort to restore confidence in market integrity, the Securities Exchange Act of 1934 was passed which birthed the Security Exchange Commission (SEC). Section 16 of the act, also known as the "anti-Wiggin" proposal, was specifically included to root out abusive securities trading by people with insider information.[1]

In 2008, Mathew Martoma, portfolio manager at hedge fund SAC Capital Advisors, made a twenty minute phone call to hedge fund owner Steven A. Cohen. Within a span of a week, Cohen reversed his long position in pharmaceutical firms Elan and Wyeth by nearly a billion dollars, which ultimately generated a profit of over $270,000,000. Martoma was later convicted of insider trading. Insider information was passed through a long chain of communication – from Elan to a doctor that conducted clinical trials on behalf of Elan, to Martoma, who was introduced by expert network intermediary Gerson Lehrman Group. The conviction was the culmination of a painstaking six year investigation by the SEC to uncover insider trading practices at SAC Capital. Yet, during the trials, the judge specifically asked that attorneys not even discuss Steven Cohen, since he was not charged with those trades, or even named as an unindicted co-conspirator. There was no direct evidence that Cohen had actually received insider information prior to his trades.[2]

These two instances of insider trading, set apart by nearly a century, draw a striking picture. First, the emergence of regulation formidably impacted the way in which insider information was transmitted from the source to the user. In both cases, the ultimate beneficiary of insider information was well out of reach of legal prosecution. In the recent case, this was achieved by insiders strategically forming a complex network of connections that had adapted to greater regulatory sophistication. Interestingly, greater regulatory sophistication brought rise to intermediaries that specialize in facilitating information transmission sources of insider information and those who seek it.

[1] http://scholarship.law.upenn.edu/cgi/viewcontent.cgi?article=6444&context=penn_law_review
[2] http://www.newyorker.com/magazine/2014/10/13/empire-edge

In this paper, we develop a model of endogenous network formation to analyze a cat and mouse game between regulators, who set and enforce the regulatory environment, and agents, who form links through which information can be transmitted. In the model, agents benefit from transmitting information to certain other agents that can utilize the information. The regulator's objective is to detect and punish agents for sharing information, which may constitute insider information that imposes negative social externalities. However, the regulator is limited in his capacity to observe both agents' networks and information transfers within the economy. In particular, the regulator must incur an increasing cost to enforce with greater search intensity. Agents can form costly links with other agents, through which they may transmit information. While transmitting information through a shorter chain increases expected gains, agents may form complex networks that allow for information to be transmitted through a long chain of agents in order to circumvent regulation.

First, we show that regulatory ambiguity arises as an equilibrium phenomenon. Specifically, we show that for any given enforcement strategy potentially chosen by the regulator, agents can adapt by forming more extensive networks that conceal the transmission of information. Agents *game* the system. Importantly, increasing the penalty from detection, or the search intensity of the regulatory environment do not generically hinder transmission. As a result, in equilibrium, the regulator mixes between low and high intensities of enforcement, effectively employing *regulatory ambiguity*. Doing so induce agents to engage in riskier transmission behavior, allowing for the regulator to successfully catch the agent with a positive probability.

This rationalizes a long standing argument held by regulatory institutions that advocate for flexible, broad guidelines on what constitutes insider trading. Regulatory institutions have been criticized for only loosely defining what constitutes illegal activity pertaining to the use of insider information. With broad rules governing insider trading, courts have been used to distinguish between legal and illegal use. And yet, we show that a precise regulatory framework necessarily allows for more gaming, as information networks quickly adapt to the regulatory environment.

Regulatory ambiguity significantly impacts agents' network formation. In particular, we show that agents value being part of a network that enables *flexible* transmission of information, or which that facilitates multiple path lengths of transmission between agents. A flexible

network provides agents with the option of transmitting information either through a riskier, more direct path and a safer, longer path.

In equilibrium, agents form a flexible core-periphery network. In a core-periphery, the core members of the network act as conduits of information on behalf of the network. Specifically, all long and short information chains are facilitated by passing information through the core. This structure ensures that all periphery members of the network have access to a wide set of paths of differing lengths from which to choose a transmission strategy.

The model generates the endogenous rise of intermediaries in the form a small core responsible for matching and transmitting a large mass of senders and receivers of insider information. Empirically, the formation of core-periphery networks to disseminate insider information potentially explains the recent rise of expert networks that have become increasingly implicated in insider trading cases in the US. These firms are consulting intermediaries that specialize in connecting clients looking for experts in various fields, including but not limited to technology, media, medicine, law, and finance, reportedly at rates of up to $1,300 an hour.[3] By providing clients to access to experts that may own proprietary information, expert networks may provide a discrete channel through which information can be shared. These intermediaries have become a rapidly growing primary source of information and resource to hedge funds, private equity firms, and other investment firms. Furthermore, by providing an extra layer of information transmission, these firms also potentially insulate clients from legal trouble, as the current regulatory framework requires proof of knowledge that the nature of the information is in fact, insider information.

This paper is the first of our knowledge to theoretically study the formation of insider networks. In particular, we abstract from the normative question of whether insider trading is desirable or not. Instead, we focus on how insiders, through the formation of networks, may accomplish desired transactions given constraints strategically imposed by a principal, which is in this case, regulators.

As a result, the paper insights are applicable to other settings in which agents use networks as a strategic tool for transmission of information or goods in a game. Agents committing money laundering may utilize a longer chain of financial intermediaries in order to obfuscate the source and destination of money transfers from authorities. The model is relevant for

[3] https://www.bloomberg.com/news/articles/2018-02-28/investors-are-paying-1-300-per-hour-for-expert-chats

studying networks for organized crime or terrorism, for which agents may form networks specifically to conceal communication and money transfers from authorities. Our setting is also applicable to network design problems, in which agents want to transmit messages, but must combat a strategic actor or exogenous risks. For example, security and privacy is a first order concern when designing a network, either for communication or information sharing – the efficient network entails safeguarding the anonymity of messages from a malicious attacker while economizing on the cost of building and using the network. The model can be extended to study trading networks, in which agents prefer trading in proximity, but face counterparty risk. Our model suggests that a core-periphery structure may endogenously form, with intermediaries at the core that re-direct trade flow between counterparties.

More generally, our paper develops an approach to modeling formation of networks that are neither dense nor sparse with a continuum of agents. A common challenge in network theory involves dealing with the discrete nature of network structure, which limits tractability. We provide a solution to incorporating a continuum of agents that form topologically non-trivial networks which are neither dense nor sparse.

Related Literature. Our paper is related to several strands of literature in economics and finance. An extensive literature examines the diffusion of information through social networks in financial markets. Cohen et al. (2010) finds strong evidence of information diffusion through educational ties. Maggio et al. (2017) finds extensive evidence of information diffusion through broker networks. Ahern (2017) shows that a majority of prosecuted insider trading cases involve insider information being transferred through geographical, family, and social networks.

As in DeMarzo et al. (1998), our paper takes as given the objective of a regulator to detect and deter the sharing of insider information. Our focus is to study the joint equilibrium determination of regulation and network formation and information transmission. Notably, we show departure from the conclusions of DeMarzo et al. (1998) – enforcement policy is necessarily ambiguous (i.e. subject to randomness) due to the possibility of gaming by agents.

Our paper is related to a growing literature that studies endogenous network formation. Acemoglu et al. (2014) studies how information aggregation occurs through communication on endogenous social networks. Bloch and Dutta (2009) studies how communication networks with endogenous link strength bring rise to star networks. Erol and Ordoñez (2017) and Erol

(2017) study the formation of interbank networks under regulation. This paper is the first to our knowledge that studies the formation of information networks and its interaction with the regulatory environment. We show that a core-periphery structure arises endogenously in insider trading networks, and furthermore show that a small number of agents form an intermediary to facilitate information transmission.

The paper is organized as follows. In Section 2, we describe the model environment. Section 3 lays out equilibrium properties and the necessity of regulatory ambiguity. In Section 4, we analyze the main model with network formation. In Section 5, we highlight the endogenous rise of intermediaries in information networks. In Section 6, we discuss the robustness and the generality of the results. We conclude in Section 7.

2 Model

Agents. There are three periods, $t = 1, 2, 3$. There is a regulator and a μ mass of agents in the economy $A \subset \mathbb{R}$. μ_S mass of agents S are potential senders, and μ_R mass of agents R are potential receivers, where $S \cup R = A$ and $S \cap R = \emptyset$. A random pair of senders and receivers $(s, r) \in S \times R$ obtain an opportunity to exploit information. If the sender who obtains information successfully transmits the information to the receiver, they derive private payoffs.[4] However, the use of information is assumed to impose a negative social externality. The regulator's objective is to minimize social costs that arise from the exploitation of information.

Network formation stage. We use the Borel σ-algebra and the Lebesgue measure denoted λ. An edge is an element of $[A]^2$, and $E \subset [A]^2$ is used to denote a set of edges. Given E, we use $N_k = \{j : \{j, k\} \in E\}$ to denote the set of neighbors of agent $k \in A$. (A, E) is called a network if E is measurable in $\mathbb{R}^2$. For shorthand, we also refer E as a network. We count the number of edges $e(E)$ in a network (A, E) by

$$2e(E) = \int_{k:\lambda(N_k)=0} |N_k| + \sum_{k:\lambda(N_k)>0} \lambda(N_k). \tag{1}$$

Here, we add up $\lambda(N_k)$ for nodes with positive measure neighborhood and integrate $|N_k|$ for nodes with zero measure neighborhood. This way, given that all neighborhoods N_k are

[4] In Section 6, we discuss how the model can be extended to allow for multiple pairs receiving opportunities to exploit information.

measurable in $\mathbb{R}$, we count each edge exactly twice. This allows us to measure the number of edges in a network over a continuum of nodes wherein the network is neither sparse nor dense. [5]

At $t = 1$, agents forge costly (undirected) links to form a network through which information can be transmitted. Each edge costs η to form, resulting in a total cost of $\eta e(E)$ to form edges E.

Information transmission stage. At $t = 2$, one sender s, uniformly drawn at random from S, obtains information, and one receiver r, uniformly drawn at random from R, has liquidity to trade based on the information. Information can only be transmitted over the links in the network. Formally, sender s decides whether to transmit information to receiver r, and if so, the path through which to transmit information. Let this choice be denoted $p \in \mathcal{P}(E, s, r) \cup \{\mathbf{0}\}$, where $\mathcal{P}(E, s, r)$ denotes the set of paths between s and r in E and $\mathbf{0}$ denotes the decision not to send information. Note, if $\mathcal{P}(E, s, r) = \emptyset$, then $\mathbf{0}$ is the only feasible choice. Successfully transmitting information via a path $(s = n_0, n_1, n_2, ..., n_{l-1}, r = n_l)$ of length l yields a total payoff of $\Pi(l)$.[6] Here, $\Pi(\cdot)$ strictly decreasing for $l > 0$, and $\Pi(l) > \eta\mu$ for all $l > 0$. With slight abuse of notation, the payoff from taking the action $\mathbf{0}$ and not transmitting information is denoted $\Pi(\mathbf{0})$, which is equal to 0.

Regulatory environment. The regulator is able to observe when any particular receiver makes a profit. Since the profit is associated with insider information, we assume that the regulator can infer the identity of the sender. Hence, the regulator knows the identities of the sender and the receiver. We assume that the regulator is able to successfully prosecute and punish the pair if and only if the regulator can directly show that information was relayed from the sender to the receiver.

Formally, at $t = 3$, if there has been information transmission at $t = 2$, the identities of

[5] If the focus were dense networks in which all nodes have positive measure of neighbors, one could simply use the Lebesgue measure of E in $\mathbb{R}^2$ to count the edges. This is equivalent to integrating $\lambda(N_k)$ over all $k \in A$. Integrating $|N_k|$ or adding up $\lambda(N_k)$ as in expression (1) would yield ∞. If the focus were sparse networks in which all nodes have a finite number of edges, one could integrate $|N_k|$ over all $k \in A$. Here we mix both approaches in an appropriate way to account for both a few number of agents having a positive mass if edges and a large number of agents having an at most countable number of edges. This is a methodological contribution that helps study the formation of networks that are neither sparse nor dense over a continuum of nodes.

[6] Agents coordinate on how to transmit the information over the network from s to r. Coordination at this stage is not critical. Instead one can think of the following procedure. The sender s sends the information along with instructions on how to transmit it. An instruction is a sequence of distinct agents $(n_0 = s, n_1, n_2, ..., n_k = r)$. Instructions describe to whom the information and the instructions should be transmitted next along the sequence.

s and r are observed. Then the regulator chooses its enforcement strategy. Specifically, the regulator chooses search intensity $m \in \mathbb{N}$ at a cost $\kappa(m)$. Here κ is an increasing function such that there is some $\underline{m} > 1$ with $\kappa(m) > 0$ for all $m > \underline{m}$ and $\kappa(m) = 0$ for all $m \leq \underline{m}$. Given an intensity m, the regulator is able to search m edges along the transmission path starting from r and discover the identities of $n_{l-1}, n_{l-2}, ..., n_{l-m}$. If $m \geq l$, the regulator is able to identify the whole path of edges through which information has been transmitted from s to r.[7] We assume that the social externality cost of insider trading taking place to be B. If the regulator can map the path through which sender $s$transmitted information to receiver r, the agents are "caught." If agents get caught, they receive a punishment C which includes the compensation of the social damages. These are illustrated in Figures 1 and 2.

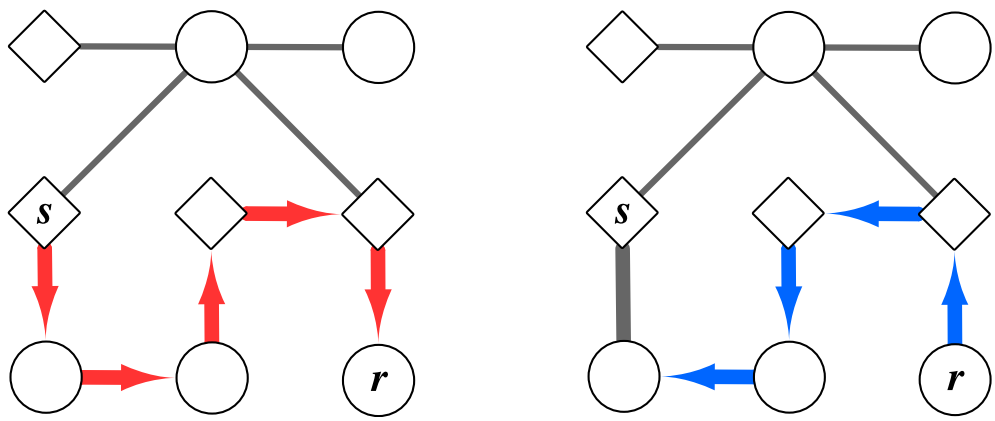

Figure 1: Pair (s, r) uses a path of length 5. Regulator chooses $m = 4$. (s, r) not caught.

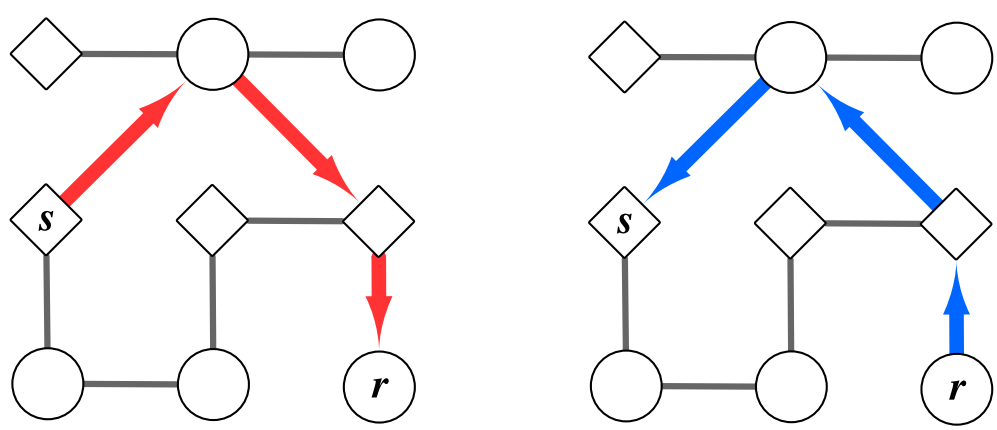

Figure 2: Pair (s, r) uses a path of length 3. Regulator chooses $m = 4$. (s, r) caught.

Information Structure and Payoffs. The regulator can observe the identity of the

[7] We assume, without loss of generality, that the regulator searches from r and tracks backward to s. All results go through if the regulator were, instead, to search from s to r, or if he were to search from both s and r towards the other.

source of information, sender s, and the identity of the beneficiary of information, receiver r. However, the regulator cannot directly observe the network, the information transmission path employed by agents, or the realization of $\Pi(l)$.

Let $l(p)$ be used to denote the path length associated with transmission path p. For a path p in E, the total sum of agents' ex-post payoffs u_A are given by:

$$u_A(E,p;m) = \begin{cases} -\eta \cdot e(E) + \Pi(l(p)) - C & \text{if } m \geq l\,(p) \text{ and } l\,(p) > 0 \\ -\eta \cdot e(E) + \Pi(l\,(p)) & \text{if } m < l\,(p) \\ -\eta \cdot e(E) & \text{if } p = \mathbf{0} \end{cases}$$

We assume that agents ex-ante commit to an equal profit-sharing rule, whereby the ex-post payoff is re-distributed between all agents, i.e. an individual agent's payoff is given by $\frac{u_A}{\mu}$. This assumption effectively ensures that agents coordinate to form the efficient network given the cost of forming links and the expected continuation payoffs.[8]

The total ex-post payoff to the regulator u_R are given by:

$$u_R\,(m;E,p) = \begin{cases} -\kappa(m) & \text{if } m \geq l\,(p) \text{ or } p = \mathbf{0} \\ -\kappa(m) - B & \text{if } m < l\,(p) \end{cases}$$

In order for enforcement to be credible, we assume that the cost C of getting caught by the regulator is sufficiently high such that no transmission is preferred to certainty of getting caught:

Assumption 1. $C > \Pi(1)$.

Equilibrium concept. We briefly overview the timeline of the model and outline our equilibrium concept. First, agents choose a measurable set of edges $E \in \mathcal{E} = 2^{[A]^2}$. After the network is formed, nature independently and uniformly draws a sender-receiver pair $(s,r) \in S \times R$. Sender s transmits information using strategy $p\,(E,s,r) \in \mathcal{P}\,(E,s,r) \cup \{\mathbf{0}\}$. If $p\,(E,s,r) \neq \mathbf{0}$, then the regulator observes (s,r) and chooses $m\,(s,r) \in \mathbb{N}$. The regulator catches and punishes agents if and only if $m\,(s,r) \geq l\,(p\,(E,s,r))$.

[8]Note, the equal profit-sharing rule is one of a broader set of arrangements that implement the formation of the efficient network. This allows us to focus on the conflict between the regulators and the insiders, rather than a potential conflict between insiders. Nonetheless, in Section 6, we propose a decentralized network formation procedure and argue that our insights are robust.

An *equilibrium* is a tuple $(E^*, \sigma_A^*, \sigma_R^*)$, where $E^* \in \mathcal{E}$ is the network formed, $\sigma_A^*(E, s, r) \in \Delta(\mathcal{P}(E, s, r) \cup \{\mathbf{0}\})$ is agents' transmission strategies, and $\sigma_R^*(s, r) \in \Delta(\mathbb{N})$ is the regulator's enforcement strategy such that:

- **(Optimal regulation)** For any pair (s, r) such that $\sigma_A^*(E^*, s, r) \neq \mathbf{0}$, upon observing (s, r), the regulator's enforcement strategy σ_R^* maximizes conditional expected payoff at $t = 3$, such that for all $m \in \mathbb{N}$,

$$u_R(\sigma_R^*(s, r); \sigma_A^*(E^*, s, r)) \geq u_R(m; \sigma_A^*(E^*, s, r)). \tag{2}$$

  For any pair (s, r) such that $\sigma_A^*(E^*, s, r) = \mathbf{0}$ (i.e. off-the-path), upon observing (s, r), the regulator's enforcement strategy σ_R^* can be any strategy that is not weakly dominated.

- **(Optimal transmission)** For any $(E, s, r) \in \mathcal{E} \times S \times R$, agents' transmission strategies σ_A^* maximizes conditional expected payoff at $t = 2$, such that for all $p \in \mathcal{P}(E, s, r) \cup \{\mathbf{0}\}$,

$$u_A(\sigma_A^*(E, s, r); \sigma_R^*(s, r)) \geq u_A(p; \sigma_R^*(s, r)). \tag{3}$$

- **(Optimal network)** E^* maximizes expected payoff at $t = 1$, such that

$$\mathbb{E}_{(s,r)}[u_A(\sigma_A^*(E^*, s, r); \sigma_R^*(s, r))] \geq \mathbb{E}_{(s,r)}[u_A(\sigma_A^*(E, s, r); \sigma_R^*(s, r))].$$

Strictly speaking, our equilibrium notion generalizes perfect Bayesian equilibrium by allowing for joint deviations on the side of the agents. This allows us to study strongly stable networks in a perfect Bayesian equilibrium. The only restriction we impose on the perfect Bayesian equilibrium is that the choice of the network must be a pure strategy. This, along with Bayesian updating, implies that the regulator correctly infers the network E^* in equilibrium. This is embedded into the condition in (2). Hence we drop the beliefs of the regulator regarding network formed from the equilibrium conditions for brevity.

Regarding beliefs about transmission/enforcement, on-the-path, these beliefs are accurately given by the strategy of the opponent. This shows up in conditions (2) and (3). Notice that we do not impose any restriction on off-the-path beliefs of the regulator regarding the

transmission strategies. If the regulator observes a pair (s, r) such that $\sigma_A^*(E^*, s, r) = \mathbf{0}$, he would correctly identify a deviation and be free to assign any belief regarding the network and path length employed by (s, r). In this case, the regulator can play any strategy that is not weakly dominated with the appropriate off-the-path belief.

3 The Value of Regulatory Ambiguity

In this section, we lay out key equilibrium properties in $t = 2$ in order to understand the regulator's equilibrium enforcement strategy. Consider sender receiver pair (s, r) that has realized. Suppose that the regulator chooses some intensity $m > 0$. For any given m, agents' best response is to transmit information through a path of length at least $m + 1$ if feasible or no transmission:

Lemma 1. *Consider the regulator's strategy of choosing m upon observing (s, r). The best response of agents is given as follows.*

- *Transmit along path of shortest length such that $l(p) > m$, if there exists such path.*
- *Do not transmit, i.e. $p = \mathbf{0}$, otherwise.*

Lemma 1 establishes that equilibrium transmission entails choosing a path that minimizes length conditional on no detection, or no transmission if detection occurs with probability one. Importantly, transmission along a path of at least length $m + 1$ avoids detection by the regulator. Since avoiding prosecution is strictly preferred to being prosecuted, agents choose the shortest transmission path conditional on avoiding detection.

Recall that $\kappa(\underline{m}) = 0 < \kappa(\underline{m} + 1)$. Accordingly, without loss of generality, we assume that the regulator never uses an enforcement strategy $m < \underline{m}$. Let $\overline{m}$ be the threshold intensity of regulation at which the cost exceeds the maximum potential benefit for the regulator, i.e.

$$\kappa(\overline{m}) \leq B < \kappa(\overline{m} + 1).$$

A direct consequence is that the regulator never uses an enforcement strategy $m > \overline{m}$. Next, we characterize the regulator's best response to some transmission strategy l chosen by agents.

Lemma 2. *Consider the agents' strategy of using a path of length l upon realization of (s, r). The best response of the regulator is given as follows.*

- *Use intensity* $m = l$*, if* $l \leq \overline{m}$*.*

- *Use intensity* $m = \underline{m}$*, if* $l > \overline{m}$*.*

Lemma 2 states that the regulator's best response is to choose enforcement intensity m equal to l if m is feasible (i.e. $l \leq \overline{m}$) or an intensity $\underline{m}$. Just as the agents prefer to transmit information through the shortest path possible that exceeds length m, the regulator prefers to extract the greatest payoff from choosing the lowest enforcement intensity that matches agents' transmission length.

In other words, as long as the cost of enforcement is not too large, the regulator opts to choose a sufficiently high intensity to ensure punishing agents. Together, Lemmas 1 and 2 offer a formal characterization of the cat and mouse game between agents and the regulator. Suppose that s and r have access to paths of length $l_1 < l_2 < ... < l_k$ where, for some $\underline{k}$ and $\overline{k}$, $l_{\underline{k}-1} \leq \underline{m} < l_{\underline{k}}$ and $l_{\overline{k}-1} \leq \overline{m} < l_{\overline{k}}$. The regulator never plays any $m < \underline{m}$, since $\underline{m}$ weakly dominates any lower m. Agents never play any $l_1, ..., l_{\underline{k}-1}$, under Lemma 1. Hence, consider when agents play $l_{\underline{k}}$. Under Lemma 2, the regulator's optimal response is to play $l_{\underline{k}}$. Then, the agents play $l_{\underline{k}+1}$, to which the regulator plays $l_{\underline{k}+1}$. Finally, agents' best response is to play $l_{\overline{k}}$, to which the regulator plays $\underline{m}$. A new cycle of best responses starts. Together, this implies the following result:

Theorem 3 (Regulatory Ambiguity)**.** *Suppose that a pair* (s, r) *is realized which has at least one path longer than* $\overline{m}$ *and at least one path that has length between* $\underline{m}$ *and* $\overline{m}$*. Then the regulator plays a mixed strategy in equilibrium.*

The above theorem formalizes the potential need for the regulator to employ *regulatory ambiguity*, in the form of a mixed enforcement strategy. Regulatory ambiguity arises when agents, in equilibrium, acquire access to a network that is able to both successfully match senders to receivers through multiple paths of differing lengths. Two things are worth noting given circumstances under which agents form sufficiently complex networks with the characteristics outlined in Theorem 3. First, as long as agents have access to a transmission path that is sufficiently long, marginally increasing cutoff $\overline{m}$ (e.g. by lowering the enforcement cost κ) does not in general improve the regulator's ability to deter agents from transmitting information. Second, while marginally increasing the penalty C of getting caught conditional on transmitting information affects equilibrium mixing strategies, it does not in itself deter

sharing of information by agents. Incurring a high enforcement cost is only justified conditional on detecting transmission or deterrence, but when agents can anticipate high regulatory oversight, senders transmit information on a path that allows circumvention with probability 1. At the same time, low regulatory oversight is justified if no transmission is expected or detection is not possible otherwise. In this case, however, agents send and receive information along a minimum path as shown in Lemma 1, which could be detected with high oversight. As a consequence, the regulator must employ a mixed strategy with respect to the enforcement intensity in equilibrium.

Regulatory ambiguity and legal boundaries. A direct interpretation of regulatory ambiguity is the regulator's use of a mixed strategy with respect to enforcement intensity. It is worthwhile highlighting how our setting also offers a foundation for laws that may be deliberately set broadly so as to avoid gaming by agents. To be concrete, consider the following adaptation of the model. Recall that in our main setting, the regulator is able to punish agents as long as he can map the transmission path between the sender and the receiver. We relax this. Instead, suppose that at $t = 1$, prior to network formation, lawmakers selects a boundary strategy b, which determines the maximum path length between a sender and receiver that constitutes illegal use of insider information. Correspondingly, suppose that any given b is associated with a cost $\beta(b)$, where $\beta(b)$ is a strictly increasing function associated with the social cost of violating of investors' civil liberties and privacy. For simplicity, we suppose that $\kappa(m) = 0$ for any m, but the set of feasible m is bounded above by b. This reflects the idea that the legal boundary b confines the regulator's ability to explore whether illegal insider trading occurred. For example, a regulator may require authorization from a judge to search, confiscate, and analyze evidence. The scope of any particular investigation would then be limited to the legal boundary b.

If there was no cost to limitlessly scrutinizing and regulating information transmission between investors, then no insider trading would occur – regulators, who could view any and all transmission of information, could detect and punish any and all insider trading. Under more reasonable circumstances, in which violations are costly, it is straightforward to see how the arguments underpinning Theorem 3 may carry forward. As long as agents are able to form sufficiently complex networks that facilitate long transmission paths, lawmakers' equilibrium boundary strategy must be a mixed strategy over a set $[\underline{b}, \overline{b}]$, for some thresholds $\underline{b}, \overline{b}$, where

$\beta(\underline{b}) = 0$, and $\beta\left(\overline{b}\right) \leq B < \beta\left(\overline{b}+1\right)$.

Given this interpretation, Theorem 3 rationalizes a common strategy implemented and advocated by regulators to maintain vagueness in what constitutes illegal insider trading activity. For instance, legal boundaries of insider trading in the US are ambiguous and often criticized for being unclear. As a consequence, insider trading prosecution cases ultimately depend on courts to determine whether the nature of the shared information is in fact insider information, i.e. material and non-public, and whether the transfer of information is illegal, e.g. a violation of fiduciary duty. This flexibility in what constitutes illegal insider information is often argued by enforcement officers of the SEC as what allows for successful prosecution and even deterrence. A quote by Arthur Levitt, former chairman of the SEC, captures this sentiment:[9]

> If the SEC had an option as to whether they wanted to have greater specificity and the Justice Department as well, they'd say 'Absolutely not' because greater specificity would give the legal fraternity various ways of getting around those specifics. They want these laws purposely vague to see to it they have the maximum leverage in terms of bringing cases.

4 The Formation and Regulation of Insider Networks

In the previous section, we find that when agents are endowed with networks which provided access to both short and long paths of information transmission, the potential for gaming regulation push the regulator to play a mixed enforcement strategy, or employ regulatory ambiguity. In this section, we analyze agents' equilibrium network formation decisions. What remains is whether agents are able to and find it profitable to form a network that satisfies the conditions in Theorem 3, and if so, what the network structure entails. In particular, agents anticipate the regulator's use of regulatory ambiguity, which must be taken into account in the network formation stage.

Without loss of generality, we make some simplifications that preserve the properties outlined in Section 3. Let the regulator choose only between $m \in \{\underline{m}, \overline{m}\}$, where $\underline{m}$ and $\overline{m}$

[9] For a detailed discussion on SEC's approach of strategic ambiguity, see http://knowledge.wharton.upenn.edu/article/insider-trading-2011-how-technology-and-social-networks-have-friended-access-to-confidential-information/

are as defined earlier with the associated costs. Hence, the regulator chooses between a low enforcement intensity $\underline{m}$ and high intensity $\overline{m}$.[10]

We define certain relevant properties of network. First, we formally define a core-periphery structure:

Definition 4. A network $G = (A, E)$ is a *core-periphery* if

- There exists a set of nodes C, called the *core*, such that
  - $\lambda(C) = 0$,
  - C is connected.
- There exists a set of nodes P, called the *periphery*, such that
  - $\lambda(P) = \mu$,
  - $\forall k \in P$, $\exists k' \in C \; s.t. \; N_k = \{k'\}$.

Given the strategic use of the network to facilitate information transmission, an important property of a network is the extent to which it can accommodate various paths of transmission, which endogenously determine the transmission strategy set of agents. In particular, given the regulator's strategy set $\{\overline{m}, \underline{m}\}$, we call a network *flexible* if agents that are part of the network have access to paths of length $\overline{m} + 1$ and $\underline{m} + 1$:

Definition 5. A network is said to be *flexible* if a.e. sender-receiver pair in the network is connected with at least one path of length $\overline{m} + 1$ and at least one path of length $\underline{m} + 1$.

Given these definitions, we fully characterize the equilibrium. To begin, we outline some observations. First, as a direct consequence of Theorem 3, the regulator employs regulatory ambiguity, effectively playing a mixed strategy between low and high intensities of enforcement. Lowering the intensity with some positive probability encourages agents to transmit information through a shorter path, which, conditional on all else equal, yields a greater payoff. This in turn enables the regulator to catch agents utilizing a short chain of transmission when high intensity enforcement is implemented.

[10] This simplification is for expositional convenience. The general model wherein all levels of enforcement intensity are possible yields nearly identical results with no additional insight. We discuss this in greater detail in Section 6.

Second, regulatory ambiguity brings rise to value in networks that enable for multiple path lengths of transmission, i.e. flexible networks. A network that offers agents the option of transmitting either through a path length of $\overline{m}+1$ or $\underline{m}+1$ allows for agents to implement a mixed transmission strategy between short and long transmission chains. This way, agents can achieve a balance between transmitting information safely at times, but also taking advantage of profitable opportunities of using short paths.

The equilibrium strategies regarding information transmission depend on what lengths of paths are available to agents. The answer to what path lengths will be available to agents in the equilibrium network depends on whether agents are able to ex-ante form a network that enables the transmission of information through a path that extends beyond the scope of regulation. We first show that there exists a feasible network that costs $\eta\mu$ and allows for agents to transmit information through arbitrarily long chains of agents:

Lemma 6. *Consider any finite set L of path lengths that are all larger than $\underline{m}$. There exists a network that costs $\eta\mu$ such that for all $l \in L$ and almost every sender receiver pair (s, r), there is a path between s and r that has length equal to l.*

Since the pair of sender and receiver are realized after the formation of the network, a desirable attribute of the network is that almost every pair of sender and receiver must somehow be linked. The above result establishes that agents can in principle form complex networks that facilitate arbitrarily long information chains between any given sender and receiver at a minimal cost. A network that achieves a path between almost every pair must include one link for almost every agent, which requires a cost of at least $\eta\mu$. Given Lemma 6, this minimal cost is sufficient to provide arbitrary levels of flexibility in the lengths of paths between almost every sender and receiver pair. An additional insight is that by forming a network in which intermediate edges between senders and receivers are shared, agents can collectively minimize the cost of links required to form any particular network. In particular, zero-measure of agents could achieve a highly connected subnetwork at a negligible cost. A network structure in which a select few agents that are highly connected and take part of the majority of transmission paths could facilitate multiple paths on behalf of many agents, and economize on the cost of links.

Formally, we show that in equilibrium agents form a flexible core-periphery network with the described properties:

Theorem 7. *In any equilibrium, agents form a network that consists of a flexible core-periphery structure. Furthermore, both the regulator and agents use strictly mixed strategies.*

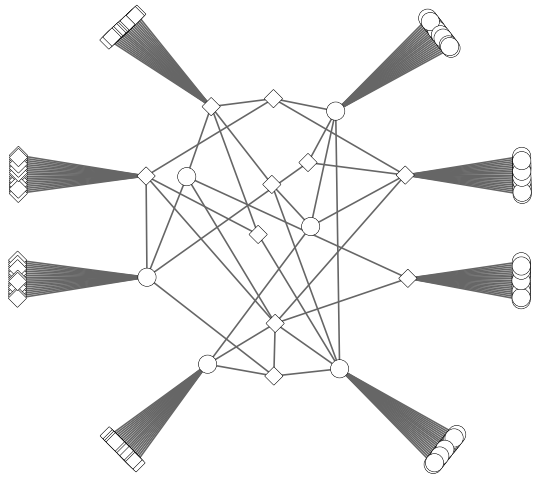

Figure 3: A flexible core-periphery network structure. Diamonds are senders, circles are receivers. Almost every sender-receiver pairs has paths of length 4 and 5.

In equilibrium, agents form a flexible core-periphery network as outlined in Definitions 4 and 5. The core of the network consists of a zero measure of agents that form a connected subnetwork. The periphery consists of a μ mass of agents, each connected to a member of the core by a single link. As such, no two periphery members are directly connected to each other. Instead, almost every pair of agents are linked through the core.

The equilibrium network structure reveals a cost-effective strategy by agents to deal with regulatory ambiguity while maximizing profits. A core-periphery structure effectively decouples the role of the network to facilitate various transmission paths to a select core members who form a dense subnetwork, and the need for connectivity between many senders and receivers, by having the entire mass μ of periphery members include at least one core member within their neighborhood. Figure 3 illustrates how a small set of core members weaves out a set of diverse path between a mass of periphery senders and receivers.

In line with Lemma 6, the core of the equilibrium network can offer a transmission path between any sender and receiver pair. Perhaps more importantly, it can also facilitate any transmission path $l \in [\underline{m}, \overline{m} + 1]$, since the cost of links is negligible relative to the mass of links between the periphery and the core. While our tractable setting delivers a stark result regarding the flexibility of the network, the intuition is general – concentrating the flexible functionality of the network to the core allows agents to minimize the cost of forming

a network ready to adapt to the regulatory environment.

Flexible core-periphery structures have an additional property that is worth mentioning. On the one hand, almost every pair of senders and receivers in the periphery have paths of length $\underline{m}+1 > 2$ between each other that pass through the core. On the other hand, periphery members have only one link. Therefore, members of the core that have links to the periphery cannot have links to both senders and receivers.

Proposition 8. *There does not exist any agent in the core that has a positive measure of sender counterparties and a positive measure of receiver counterparties.*

The equilibrium network is structured to provide sufficient distance between any pair of sender and receiver. For example, no core member is directly linked to both a mass of receivers and senders.

5 The Endogenous Rise of Information Intermediaries

We show that in equilibrium, agents form a flexible core-periphery network, with core members actively passing information on behalf of the network. In other words, agents in the core collectively facilitate information transmission by indirectly connecting the mass μ_S of senders to the mass μ_R of receivers through paths of varying length, including those of length $\overline{m}+1$ and $\underline{m}+1$. As evident by the structure, a.e. sender in the periphery relies on the core to relay information to the receiver using a desired path length.

In the model, a sender and receiver may employ multiple agents in between a chain of transmission. An important characterization to consider is the extent to which agents endogenously act as *intermediaries* in order to facilitate the transmission of information, possibly to circumvent regulation. We offer a formal definition of an intermediary:

Definition 9. An agent is said to be an *intermediary* if he transmits information on behalf of another pair of senders and receivers with a positive probability.

While passing information from the source to the user is an act of intermediation, in order for an agent to be considered an intermediary, he must act as a middleman for a positive mass of other agents in the network. This requires that an agent must provide intermediation for other agents beyond "scratching each other's back," which naturally arises in this setting

in which middlemen are necessary to avoid any substantial level of regulation. Given the characterization of intermediaries outlined in Definition 9, this implies that a (subset of) the core forms an intermediary:

Theorem 10. *Core members of the equilibrium network intermediate all the information with probability one.*

An implication of the model is the emergence of intermediaries. Specifically, the core structure results in the endogenous rise of information intermediaries, as defined under Definition 9. A small set of agents specialize in providing flexible channels of information transmission and ultimately intermediate a.e. information transmission between the set of potential senders and receivers in the model.

Interestingly, the emergence of information intermediaries draws striking parallel to the rise of consultancy firms that have played an outsized role in recent years. While information intermediaries is not and should not be viewed as an illegal entity, these consultancy firms have been implicated in an increasing number of insider trading cases in the past decade. A large fraction of these firms is commonly referred to as expert network firms, which specialize in connecting clients to experts in various fields ranging from technology, medicine, healthcare, energy, and even economics.[11]

What triggers the rise of such information intermediaries? One purported explanation for the rise of expert networks is the tightening of regulations on insider trading. In particular, major shifts in the regulatory framework in the early 2000s developed through Regulation Fair Disclosure (Reg FD), which was promoted by the SEC in 2000, and the Global Analyst Research Settlements, which was an enforcement agreement reached between the SEC, other regulatory agencies, and the ten largest investment firms in the US. Together, regulation focused on tightening governance on information disclosure by public companies, and imposing controls on the leakage of material non-public information through financial intermediaries, such as research analysts and broker-dealers. What followed was dramatic growth in the expert network industry.

This relation between tighter regulatory control and the rise of information intermediation is also observed regarding the growth in other industries as well. In 2012, the US Congress

[11] https://www.bloomberg.com/news/articles/2018-02-28/investors-are-paying-1-300-per-hour-for-expert-chats

passed the Stock Trading on Congressional Knowledge Act (STOCK Act). The general intent of the law was to prevent government officials and employees from exploiting privileged access to non-public information that could potentially be used for financial gains. Following the passage of the STOCK Act, information intermediaries emerged in the form of political intelligence firms, which specialize in connecting clients to experts in areas of policy, law, and regulation.

6 Discussion

This paper proposes a parsimonious setting to analyze insider networks. In this section, we discuss in more detail aspects of the model that are robust and how the analysis can be generalized.

Enforcement intensity. In Section 4, we consider a special case where the regulator chooses between low and high enforcement intensity, i.e. $m \in \{\underline{m}, \overline{m}\}$. This simplification is for expositional convenience. Consider the general case where the regulator chooses between any $m \in [\underline{m}, \overline{m}]$, such that the regulator can choose an enforcement intensity that corresponds to detection on arbitrary path lengths. Extrapolating from Lemma 3, in equilibrium, the regulator mixes between the set of all feasible enforcement intensities. So, is there a dominant subset of intensities for the regulator to mix over? No. The key insight is that agents can, in equilibrium, transmit on a path of length $\overline{m} + 1$ to evade punishment. This implies that agents' equilibrium payoffs from transmission must be equivalent to the payoff using a path of length $\overline{m} + 1$ regardless of what paths it actually transmits information through. Hence, agents' payoffs must be equal to $\Pi(\overline{m} + 1)$. Given this, the equilibrium outcomes from the simplified setting extends to the general environment.

Matching. In the model, we focus on the case where an opportunity arises for a single pair of sender and receiver in the network. This is without loss of generality. For instance, the results extend to the case in which opportunities arise for a positive mass of sender receiver pairs. In fact, as long as the network must be formed prior to the matching between potential senders and receivers, the efficient network takes the same form as that outlined in Theorem 7. An interesting follow-up to consider is the case where the potential senders and receivers ex-ante anticipate being matched. For example, a subset of potential senders may be privy to

information in technology, and a subset of potential receivers may be investors that specialize in the technology sector, together comprising a *group* with aligned interests. If potential senders and receivers belong exclusively to at most one group, then in equilibrium, agents may form a multiple core-periphery networks, with each representing a group. This is consistent with salient patterns in the intermediary sector whereby certain information intermediaries specialize in information pertaining to a specific sector, e.g. political intelligence.

Decentralized intermediation. The rise of intermediaries in our setting is an efficient and cooperative outcome from the side of agents. However, intermediation endogenously occurs in our environment even after imposing greater restrictions on the extent to which agents can coordinate. First, would our results survive a more competitive, decentralized environment? Suppose a variant of our model in which, a small coalitions of agents can propose to form links, and in return ask for a service fee to members who agree to join the proposed network. Formally, each coalition offers (p, E). Here, p corresponds to the price at which the service is offered if an agent agrees; E is the set of links that the coalition members propose to form connecting the coalition to itself and to members of the service. After agents choose which coalitions network to belong to, coalitions form the links to their members described by their offer E. In equilibrium, competition between coalitions would drive the service fee p to link cost η, and for effective transmission, all agents would join the same network. Each coalition, in order to save costs, would form an efficient network as outlined in Theorem 7.

A virtue of the core-periphery network in a decentralized environment is an informational advantage. Intermediaries, as characterized in Theorem 10 who happen to be coalition members that offer the "winning" proposal in the decentralized framework can facilitate the formation of the network and the transmission of information on behalf of all senders and receivers who need not be informed about who is who. In particular, it suffices to have the set of intermediaries (i.e. core members) to form the efficient network, and for periphery members to simply attach themselves to a core member. While we do not take advantage of these attractive features of the equilibrium network, the equilibrium network structure lends itself to a potential solution to other frictions that may exist in a setting of network formation and transmission.

Whistleblowers. As a move to improve regulatory effectiveness, regulators have in recent

years initiated and expanded on whistleblower programs. For example, the SEC's whistleblower program, since inception in 2011, has awarded over $250,000,000 to whistleblowers for providing tips and information regarding federal securities law violations in the US. In the context of our model, how effective might a whistleblower program be? One way to extend our model is to consider an extension in which after the regulator draws his enforcement intensity m, one of the intermediate agents along the transmission chain is hit by a liquidity shock that makes deviation ex-post attractive. Suppose that a whistleblower can offer information regarding the agents he received and sent information to on the chain. As such, for some reward R, the regulator is able to extend his effective enforcement intensity by length 2. To the extent that the whistleblower program is cost effective, agents will adjust their network formation strategy to accommodate the need for longer transmission paths. Under this simple extension, it follows that a whistleblower program may not qualitatively impact the equilibrium network structure or the use of regulatory ambiguity.

7 Conclusion

In this paper, we study a model of endogenous formation of networks over which agents transmit information under regulation. We show how a cat and mouse game naturally arises between a regulator, who sets and enforces a regulatory environment, and agents, who form networks to disseminate and share insider information. In equilibrium, the regulator implements regulatory ambiguity that induces a fraction of agents to take greater risks in information transmission. Agents adapt to regulation by forming a flexible network with a core-periphery structure, which endows agents with the option to transmit information through various paths of differing length.

We show how the core represents the endogenous rise of information intermediaries. The small set of agents that form the core of the network intermediate the vast majority of information transmitted between potential senders, i.e. insiders, and receivers, i.e. those that seek to exploit information. We draw parallels between the emergence of information intermediaries to observations of growth of the expert network industry following stricter regulation regarding disclosure and insider trading in recent years. The surge of information intermediaries suggest that rather than curtailing insider trading, market participants may have adapted

by developing alternative and more complex channels through which insider information is shared and exploited.

The model's insights are readily applicable to other settings in which agents use networks as a strategic tool for transmission of information or goods in a game. For example, agents who wish to commit money laundering may want to use a long chain of financial intermediaries in order to circumvent detection from authorities. The model is also relevant for studying organized crime or terrorist networks, for which it is valuable to conceal communication, money transfers, and organizational structure.

As a final note, we believe that it is applicable to a broader set of problems. In particular, the model can be used to understand network design problems, in which agents want to transmit messages, but must combat a strategic actor (as in our case) or exogenous risks. Many networks involving communication or information sharing require achieving a sufficient level of security and privacy. An efficient network entails safeguarding the anonymity of messages from a malicious attacker while economizing on the cost of building and using the network. The model can be extended to study trading networks, in which agents prefer trading in proximity, but face counterparty risk. In particular, we highlight potential benefits of having a core-periphery structure that allows for intermediaries to flexibly re-direct trade flow between counterparties.

References

Acemoglu, Daron, Kostas Bimpikis, and Asuman Ozdaglar, "Dynamics of information exchange in endogenous social networks," *Theoretical Economics*, 2014, *9* (1), 41–97.

Ahern, Kenneth R, "Information networks: Evidence from illegal insider trading tips," 2017.

Bloch, Francis and Bhaskar Dutta, "Communication networks with endogenous link strength," *Games and Economic Behavior*, 2009, *66* (1), 39–56.

Cohen, Lauren, Andrea Frazzini, and Christopher Malloy, "Sell-side school ties," *The Journal of Finance*, 2010, *65* (4), 1409–1437.

DeMarzo, Peter M, Michael J Fishman, and Kathleen M Hagerty, "The optimal enforcement of insider trading regulations," *Journal of Political Economy*, 1998, *106* (3), 602–632.

Erol, Selman, "Network hazard and bailouts," 2017.

_ **and Guillermo Ordoñez**, "Network reactions to banking regulations," *Journal of Monetary Economics*, 2017, *89*, 51–67.

Maggio, Marco Di, Francesco Franzoni, Amir Kermani, and Carlo Sommavilla, "The relevance of broker networks for information diffusion in the stock market," 2017.

A Appendix

Proof. **(Lemma 1)** QED. □

Proof. **(Lemma 2)** QED. □

Proof. **(Theorem 3)** Q.E.D. by Lemmas 1 and 2. □

Proof. **(Lemma 6)** Let $k = max\, L$. Note that $k \geq \underline{m} + 1 \geq 3$. Take $k-1$ agents from A, say A', and form a complete network among A'. Pick one $j \in A'$ and connect all senders in A/A' to j. Pick another $j' \in A'/\{j\}$ and connect all receivers in A/A' to j'. In the network formed,

$$2e = \int_{k:\lambda(N_k)=0} |N_k| + \sum_{k:\lambda(N_k)>0} \lambda(N_k)$$

$$= \int_{A/A'} 1 + \sum_{k \in A'} \lambda(N_k) = \lambda\left(A/A'\right) + \lambda\left(N_j\right) + \lambda\left(N_{j'}\right) = \mu + \mu_S + \mu_R = 2\mu.$$

So, $e = \mu$. Notice that every pair in A' have paths of length $3, 4, ..., k$ between them since A' is a complete subnetwork.

Further note that the construction does not actually rely on connecting all senders to one agent in A'. It is ok to use any at most countable number of agents as "connecters" of senders, and a separate at most countable set of agents as "connectors" of receivers. The construction works as long as "connectors" of senders and receivers are separate. □

Proof. **(Theorem 7)** Note that for a flexible core-periphery network that involves all agents, we have $e = \mu$.

Step 1: Take any equilibrium. Suppose that there are μ'_S mass of senders S' and μ'_R mass of receivers R' that have links in the network that is formed. Note that the cost of forming links that has been incurred is at least $(\mu'_S + \mu'_R)\,\eta$ since each agent has at least one link.

Denote $X \subset S' \times R'$ the set of pairs that have at least one path longer than $\overline{m}$ and no paths with length between $\overline{m}+1$ and $\underline{m}$ (Throughout the proof we mean strict inequality when we say "path longer than x" or "path shorter than y", and we mean weak inequality on both sides when we say "paths with length between x and y"). Denote $Y \subset S' \times R'$ the set of pairs that have at least one path with length between $\underline{m}+1$ and $\overline{m}$, and no path longer than $\overline{m}$. Denote $Z \subset S' \times R'$ the set of pairs that do not have any paths longer than $\underline{m}$. Denote

$T \subset S' \times R'$ the set of pairs that have at least one path with length between $\underline{m}+1$ and $\overline{m}$, and at least one path that is longer than $\overline{m}$. Denote $T^* \subset T$ the set of pairs that have at least one path with length equal to $\underline{m}+1$ and at least one path with length equal to $\overline{m}+1$.

Concerning pairs in X, in equilibrium, when a pair in $(s,r) \in X$ realizes, (s,r) must send information via their shortest path that is longer $\overline{m}$, and the regulator must play $\underline{m}$. Recall that the regulator never plays $m \leq \underline{m}-1$ because such m are weakly dominated by $\underline{m}$. Then if (s,r) sends the information via a path shorter than $\underline{m}+1$ with some positive probability, regulator catches them since $m \geq \underline{m}$. Then by Assumption 1, the pair (s,r) sending information via a path shorter than $\underline{m}+1$ has 0 probability in equilibrium. Not sending information with positive probability also can not be part of an equilibrium strategy for two reasons. First is that $\Pi(l) > 0$ for all l so sending information is always preferred to not sending information, conditional on not getting caught. Second is that sending information via a path longer than $\overline{m}$ implies 0 probability of getting caught because the regulator never plays $m \geq \overline{m}+1$ in equilibrium (because such m are strictly dominated by $\underline{m}$). Therefore, in equilibrium, (s,r) sends information via a path longer $\overline{m}$ (in particular, the shortest one available, clearly). Then, upon observing (s,r), regulator plays $m = \underline{m}$ in equilibrium. This is in order to incur no cost, because the equilibrium strategy of agents upon realization of (s,r) makes sure that the regulator can not catch them with $m \leq \overline{m}$.

As for pairs in Y, in equilibrium, when a pair in $(s,r) \in Y$ realizes, (s,r) does not send information (and off-the-path, regulator plays $\overline{m}$ when it observes (s,r)). In particular, these pairs generate 0 return from transmission. Similar to before, (s,r) never puts positive probability of sending information via a path shorter than $\underline{m}$ because that is certainty of getting caught. Hence, if the regulator observes (s,r), then it knows that the transmission has occurred, which must have been via a path of length between $\underline{m}+1$ and $\overline{m}$. Then regulator plays $\overline{m}$ upon observing (s,r). But then agents get caught with certainty, so their best response must be to not send information. (Note that the regulator playing $\overline{m}$ upon observing (s,r) is the best-response, but this outcome is off-the-path.)

Pairs in Z clearly do not transmit information. Accordingly, the payoff generated by pairs in X from transmission is at most $\Pi(\overline{m}+1)$ because they use paths longer than $\overline{m}$. The payoff generated by pairs in Y and Z from transmission is 0 because they do not send information.

Finally, consider pairs $(s,t) \in T$. Denote $\underline{l}(s,r)$ the shortest path longer than $\underline{m}$ that (s,r)

has. Denote $\bar{l}(s,r)$ the shortest path longer than $\overline{m}$ that (s,r) has. When a pair in $(s,r) \in T$ realizes, it must mix between $\underline{l}(s,r)$ and $\bar{l}(s,r)$. This is just a corollary of the cat and mouse game argument we made earlier, given that agents never send information via a path shorter than $\underline{m}+1$. By the indifference condition, the payoff that (s,r) generates from transmission is $\Pi\left(\bar{l}(s,r)\right) \leq \Pi(\overline{m}+1)$. Denote $\sigma_A^*(E^*,s,r)[\underline{l}(s,r)] \in (0,1)$ the probability that (s,r) uses $\underline{l}(s,r)$, $\sigma_A^*(E^*,s,r)\left[\left(\bar{l}(s,r)\right)\right] = 1-\sigma_A^*(E^*,s,r)[\underline{l}(s,r)] \in (0,1)$ the probability that (s,r) uses $\bar{l}(s,r)$, $\sigma_R^*(s,r)[\underline{m}] \in (0,1)$ the probability that the regulator uses $\underline{m}$ upon observing (s,r), and $\sigma_R^*(s,r)[\overline{m}] = 1-\sigma_R^*(s,r)[\underline{m}] \in (0,1)$ the probability that the regulator uses $\overline{m}$ upon observing (s,r).

Now consider the following deviation by the agents from the equilibrium strategy. Suppose that agents in $(S \cup R) \setminus (S' \cup R')$ still do not form any links, and hence do not transmit any information. Suppose that all agents in $S' \cup R'$ form a "flexible core-periphery among $S' \cup R'$" (meaning that the definitions of flexible and core-periphery should be applied to S' and R' rather than S and R). Remember that the network formed is not observed by the regulator. Thus the regulator can not react to this deviation. As for information transmission in the deviation, if a pair in X realizes, it now uses a path of length $\underline{m}+1$. If a pair in $Y \cup Z$ realizes, it sends information via a path of length $\overline{m}+1$. If a pair $(s,t) \in T$ realizes, it uses a path of length $\underline{m}+1$ with probability $\sigma_A^*(E^*,s,r)[\underline{l}(s,r)]$ and a path of length $\overline{m}+1$ with probability $\sigma_A^*(E^*,s,r)\left[\left(\bar{l}(s,r)\right)\right]$.

Since regulator plays $\underline{m}$ upon observing a pair in X, pairs in X now generate $\Pi(\underline{m}+1)$ which is strictly larger than the payoff they generate in the equilibrium (at most $\Pi(\overline{m}+1)$). Pairs in Y and Z now generate payoff $\Pi(\overline{m}+1)$ whereas they generate 0 payoff in the equilibrium.

As for a pair $(s,r) \in T \backslash T^*$, by definition, we either have $\bar{l}(s,r) > \overline{m}+1$ or $\underline{l}(s,r) > \underline{m}+1$ or both. Then the payoff (s,r) generates in the deviation is strictly larger than that in equilibrium:

$$\sigma_A^*(E^*,s,r)\left[\left(\bar{l}(s,r)\right)\right] \cdot \Pi(\overline{m}+1) + \sigma_A^*(E^*,s,r)[\underline{l}(s,r)] \cdot \Pi(\underline{m}+1)$$

$$-\sigma_A^*(E^*,s,r)[\underline{l}(s,r)] \cdot \sigma_R^*(s,r)[\overline{m}]\, C$$

$$> \sigma_A^*(E^*,s,r)\left[\left(\bar{l}(s,r)\right)\right] \cdot \Pi\left(\bar{l}(s,r)\right) + \sigma_A^*(E^*,s,r)[\underline{l}(s,r)] \cdot \Pi(\underline{l}(s,r))$$

$$-\sigma_A^*\left(E^*,s,r\right)\left[\underline{l}\left(s,r\right)\right]\cdot\sigma_R^*\left(s,r\right)\left[\overline{m}\right]C.$$

For pairs in T^*, the payoff does not change.

Wrapping all this up, all pairs in $(S'\times R')\setminus T^*$ generate strictly larger payoff than the equilibrium and pairs in T^* generate the same payoff. Moreover, the cost of links has not gone up because the "flexible core-periphery among $S'\cup R'$" in the deviation has a cost of $(\mu'_S+\mu'_R)\,\eta$. Therefore, it must be the case that $(S\times R)\setminus T^*$ has zero measure and the equilibrium network must cost exactly $(\mu'_S+\mu'_R)\,\eta$. Otherwise, this would be a profitable deviation. The network must be "flexible among $S'\cup R'$" and it must cost exactly $(\mu'_S+\mu'_R)\,\eta$.

Step 2: The equilibrium strategies of almost every pair in $S'\times R'$ must then be strictly mixed because $(S\times R)\setminus T^*$ has zero measure. The indifference conditions yield that the payoff of agents from information transmission is equal to the payoff of agents from using the long path $\overline{m}+1$. This has expected payoff $\frac{\mu'_S\mu'_R}{\mu_S\mu_R}\Pi\left(\overline{m}+1\right)$ from transmission because there is $\frac{\mu'_S}{\mu_S}$ probability that a sender in S' has information and $\frac{\mu'_R}{\mu_R}$ probability that a receiver in R' has liquidity. Then the expected ex-post payoff of agents is

$$V':=\frac{\mu'_S\mu'_R}{\mu_S\mu_R}\Pi\left(\overline{m}+1\right)-\left(\mu'_S+\mu'_R\right)\eta.$$

Then consider the following deviation. Suppose that all agent in $S\cup R$ come together and form a flexible core-periphery. If a pair in $S'\times R'$ realizes, it uses the equilibrium transmission strategy in the deviation as well. If pairs in $(S\times R)\setminus(S'\times R')$ realize, they use a path of length $\overline{m}+1$. Note that $m\geq\overline{m}+1$ is strictly dominated for the regulator, so (off-the-path) when a pair in $(S\times R)\setminus(S'\times R')$ realizes, regulator plays $m\leq\overline{m}$. Therefore, at the deviation, when a pair in $(S\times R)\setminus(S'\times R')$ realizes, which have used a path longer than $\overline{m}$, they do not get caught. Then the expected payoff from this deviation is

$$V:=\Pi\left(\overline{m}+1\right)-\left(\mu_S+\mu_R\right)\eta.$$

Suppose that $\mu'_S\neq\mu_S$ or $\mu'_R\neq\mu_R$. Then by $\mu'_S\leq\mu_S$, and $\mu'_R\leq\mu_R$, we have $\left(\mu'_S\right)^{-1}+\left(\mu'_R\right)^{-1}>\mu_S^{-1}+\mu_R^{-1}$. Then

$$\left(\mu'_S+\mu'_R\right)\frac{\mu_S\mu_R}{\mu'_S\mu'_R}\eta>\left(\mu_S+\mu_R\right)\eta\implies$$

$$V = \Pi(\overline{m}+1) - (\mu_S + \mu_R)\eta > \Pi(\overline{m}+1) - \left(\mu'_S + \mu'_R\right)\frac{\mu_S\mu_R}{\mu'_S\mu'_R}\eta = \frac{\mu_S\mu_R}{\mu'_S\mu'_R}V'. \tag{4}$$

Recall that $\Pi(l) > \eta\mu$ for all l. Then $V > 0$. If $V' \leq 0$, then $V > V'$. If $V' > 0$, then by (4), $V > \frac{\mu_S\mu_R}{\mu'_S\mu'_R}V' > V'$, and so $V' > V$. In both cases, this is a profitable deviation. Contradiction. Then the equilibrium network must have $\mu'_S = \mu_S$ and $\mu'_R = \mu_R$.

That is, the equilibrium network must be flexible and it must cost $\mu\eta$. As shown in Step 1, realized pairs must mix between paths of length $\underline{m}+1$ and $\overline{m}+1$ and regulator must mix between $\underline{m}$ and $\overline{m}$ with appropriate probabilities.

Step 3: Now we show that this description is an equilibrium. It is clear regulator does not have a profitable deviation. Following up on the cat and mouse game argument, it is clear that without deviating from the network, agents do not have a profitable deviation from the transmission strategies either.

Consider a pair (s,r) that has both lengths of length $\underline{m}+1$ and $\overline{m}+1$ in the candidate equilibrium (Remember: a.e. agent in the candidate profile satisfy this due to flexibility). By the description, this pair mixing between length $\underline{m}+1$ and $\overline{m}+1$, and the regulator is also mixing between $\underline{m}$ and $\overline{m}$ upon observing this pair. By the indifference conditions, the regulators mixing strategy makes them indifferent satisfies

$$\Pi(\underline{m}+1) - \sigma^*_R(s,r)[\overline{m}] \cdot C = \Pi(\overline{m}+1)$$

and the pair generates $\Pi(\overline{m}+1)$ payoff from transmission.

Now suppose that agents deviate to a different network E. Suppose that upon the deviation from the network, pair (s,r), if realized, deviates to a strategy that puts probability $\sigma_A(E,s,r)[l]$ in total on paths of length l. Denote $\sigma'(E,s,r) = \sum_{l\leq\overline{m}}\sigma_A(E,s,r)[l]$, $\sigma''(E,s,r) = \sum_{\underline{m}+1\leq l\leq\overline{m}}\sigma_A(E,s,r)[l]$, $\sigma'''(E,s,r) = \sum_{l\geq\overline{m}+1}\sigma_A(E,s,r)[l]$. The expected payoff from transmission is then

$$\sum_l \sigma_A(E,s,r)[l]\cdot\Pi(l) - \left[\sigma'(E,s,r) + \sigma''(E,s,r)\cdot\sigma^*_R(E^*,s,r)[\overline{m}]\right]C$$

$$\leq \sum_{l\geq\overline{m}+1}\sigma_A(E,s,r)[l]\cdot\Pi(l) - \sigma''(E,s,r)\cdot\sigma^*_R(E^*,s,r)[\overline{m}]\cdot C$$

$$\leq \sigma''(E,s,r)\cdot\Pi(\underline{m}+1) + \sigma'''(E,s,r)\cdot\Pi(\overline{m}+1) - \sigma''(E,s,r)\cdot\sigma^*_R(E^*,s,r)[\overline{m}]\cdot C$$

$$= \sigma''(E,s,r)\left[\Pi(\underline{m}+1) - \sigma_R^*(E^*,s,r)[\overline{m}]\cdot C\right] + \sigma'''(E,s,r)\cdot\Pi(\overline{m}+1)$$

$$= \left[\sigma''(E,s,r) + \sigma'''(E,s,r)\right]\Pi(\overline{m}+1) \leq \Pi(\overline{m}+1).$$

That is, (s,r) can not improve upon the equilibrium payoff from transmission in any deviation. This holds for for a.e. pair in $S \times R$ due to flexibility. Therefore, the payoff of agents in the candidate can not be improved upon.

Step 4: Finally, we show that a network is flexible, incorporates μ mass agents, and costs $\mu\eta$ if and only if it is a flexible core-periphery network incorporating a.e. agent. It is clear that flexible core-periphery network satisfies the three conditions. We show the reverse as follows.

If there is a positive measure of agents with more than one edge, then total cost links exceeds $(\mu_S + \mu_R)\eta$. In order to have a.e. pair to have a path, a.e. agent must have at least one edge. Therefore, a.e. agent must have exactly one edge. Denote the set of agents that have exactly one edge P_1 where $\lambda(P_1) = \mu$.

By flexibility, the measure of sender-receiver pairs in $S \times R$ that are connected via both a long and short path must have measure $\lambda(S \times R) = \mu_S\mu_R$. Then, the measure of senders that are connected to a.e. receiver via both a short and long path must be μ_S. Similarly for receivers, the measure of receivers that have exactly one link and are connected to a.e. sender via both a short and long path is μ_R. Denote the set of these senders receivers P_2 where $\lambda(P_2) = \mu$. Denote $P = P_1 \cap P_2$. Since $\lambda(P_1) = \mu$ and $\lambda(P_2) = \mu$, we have $\lambda(P) = \mu$. Denote the neighbors of P as $C = \cup_{k\in P} N_k$.

Notice that no two agents in P are neighbors of each other. Because agents in P have exactly one link. If two agents $i, j \in P \subset P_1$ where neighbors of each other, then they would not have any other neighbors, which contradicts being in P_2. Then, since $C = \cup_{k\in P} N_k$ is the set of neighbors of agents in P and no two agents in P are neighbors of each other, $C \cap P = \emptyset$. Then $\lambda(C) = 0$ because $\lambda(P) = \mu$. Finally notice that all members of C must be connected. Suppose not: $\exists i \neq j \in C$ such that i and j are not connected. By definition of C, there exists $i' \neq j' \in P$ such that $N_{i'} = \{i\}$ and $N_{j'} = \{j\}$. By flexibility, i' and j' are connected. Then also i and j must be connected. Therefore, the all conditions of the definition of a core-periphery are satisfied.

Combining Steps 2, 3, and 4, we conclude that a network arises in equilibrium if and only

if it is a flexible core-periphery network. □

Proof. **(Proposition 8)** Suppose not. Then there is positive mass of senders and receivers that have only one counterparty which is common, say i. Then all paths between these positive mass of sender and receiver pairs must go through i. But then the only path between these senders and receivers has length 2, which is shorter than $\underline{m} + 1$. This contradicts flexibility of the network. □

Proof. **(Theorem 10)** Under Definition 9, it follows directly that a subset of the core members of equilibrium network act as intermediaries. □