ECONSTOR
Make Your Publications Visible.

A Service of
ZBW
Leibniz-Informationszentrum Wirtschaft
Leibniz Information Centre for Economics

Hartwick, John M.

Working Paper

Trade in Intermediate Goods and International Specialization

Queen's Economics Department Working Paper, No. 876

Provided in Cooperation with:
Queen's University, Department of Economics (QED)

Suggested Citation: Hartwick, John M. (1993) : Trade in Intermediate Goods and International Specialization, Queen's Economics Department Working Paper, No. 876, Queen's University, Department of Economics, Kingston (Ontario)

This Version is available at:
https://hdl.handle.net/10419/189200

Standard-Nutzungsbedingungen:

Die Dokumente auf EconStor dürfen zu eigenen wissenschaftlichen Zwecken und zum Privatgebrauch gespeichert und kopiert werden.

Sie dürfen die Dokumente nicht für öffentliche oder kommerzielle Zwecke vervielfältigen, öffentlich ausstellen, öffentlich zugänglich machen, vertreiben oder anderweitig nutzen.

Sofern die Verfasser die Dokumente unter Open-Content-Lizenzen (insbesondere CC-Lizenzen) zur Verfügung gestellt haben sollten, gelten abweichend von diesen Nutzungsbedingungen die in der dort genannten Lizenz gewährten Nutzungsrechte.

Terms of use:

Documents in EconStor may be saved and copied for your personal and scholarly purposes.

You are not to copy documents for public or commercial purposes, to exhibit the documents publicly, to make them publicly available on the internet, or to distribute or otherwise use the documents in public.

If the documents have been made available under an Open Content Licence (especially Creative Commons Licences), you may exercise further usage rights as specified in the indicated licence.

WWW.ECONSTOR.EU

Mitglied der Leibniz-Gemeinschaft

Queen's Economics Department Working Paper No. 876

Trade in Intermediate Goods and International Specialization

John M. Hartwick

Department of Economics
Queen's University
94 University Avenue
Kingston, Ontario, Canada
K7L 3N6

1-1993

Discussion Paper #876

Trade in Intermediate Goods and International Specialization

by

John M. Hartwick
Queen's University

January 1993

Trade in Intermediate Goods and International Specialization

Abstract

We characterize the multiplicity of patterns of trade in the neo-classical two country, two factor, two final good model extended to incorporate an essential intermediate good. With factor price equalization and no trade in the intermediate good, there are no gains from trade by opening up the world to trade in the intermediate good. However with factor price equalization and trade in the intermediate good, there can be losses from closing off trade in the intermediate good. Examples are presented. We note that there are definable patterns of specialization for identical countries, given "compulsory" trade in intermediate goods between them. We also examine the cases of three primary factors and two essential intermediate goods.

John M. Hartwick*
Queen's University

Trade in Intermediate Goods and International Specialization

Introduction

Trade in final goods between distinct countries is in a large class of cases a substitute for a pooling of each country's endowment with those of its trading partners. A simple measure of the gains from trade between countries is for a given vector of world final goods prices how close to the value of world output under a pooling of endowments does the free trade in final goods outcome come. We make use of this criterion in an investigation of the implications of free trade in purely intermediate goods. For concreteness we deal with two countries, two factors, two final goods and one purely intermediate good. The two countries have identical neoclassical, CRTS technologies. We focus on how differences in endowments affect the gains from trade and the pattern of trade when the essential intermediate good is freely tradable (TIIG for trade in intermediate goods) and when it is not tradable (NTIIG). We observe that given factor price equalization (FPE) under NTIIG, the opening of intermediate goods to trade yields no additional "gains from trade" in the sense above. However the reverse is not true: given a TIIG equilibrium with FPE, the prohibition on trade in the intermediate good can yield an equilibrium without FPE and with a reduction in the gains from trade. Also there can be no FPE and there will be larger gains under the TIIG regime than under the NTIIG regime. This latter might be considered the commonsensical result: there are gains from trade in intermediate goods.

* Avinash Dixit, Ron Jones and Beverly Lapham provided valuable comments on earlier drafts of this piece. Sincere thanks to them. They should not be implicated in errors, of course. Anya Hageman kindly assisted with the computations.

The subtlety is of course that there is a general class of cases in which there are no gains from trade in intermediate goods.[1] But rather more subtle is the fact that for these no gains cases, the pattern of trade under the NTIIG regime is generally unique, given a world final goods price vector, whereas under the TIIG regime, the pattern of trade is not unique. However the range of possible patterns of trade under TIIG is definable and is of some interest. (This raises the matter of relative transportation costs on commodities as being crucial to the determination of the equilibrium pattern of trade.) A curious consequence of this non-uniqueness under TIIG is that two identical countries can be at a trade equilibrium in which they are relatively specialized and are trading with one another though they are ex-ante identical.

We proceed to compute the vector of world outputs and country outputs (the pattern of specialization) at exogenous final goods prices under three regimes: country endowments pooled (the merged regime), TIIG, and NTIIG. We systematically vary final goods prices and in so doing, map out world outputs and country by country outputs. Since there are only two final goods, we can hold the price of good 1 at unity and vary the price of good 2 from zero to infinity. We can illustrate our central points with examples. First we take up the case of one vector of world outputs "supported" by a diversity of patterns of trade.

We later turn to the case of three primary factors in an effort to isolate the reason for the multiplicities in patterns of trade. We also take up two essential intermediate goods and observe an increase in possible patterns of trade, given FPE and TIIG.

---

[1]Batra and Casas [1973; p. 306] indicate this no gains from trade case but move on to discuss the pattern of trade under TIIG and do so in an unclear way. See Appendix 2 for background notes.

Factor Prices Equalized and No Trade in Intermediate Goods

There are two countries with identical neoclassical CRTS technologies, with endowments of two non-tradable primary factors. The endowment vectors have distinct factor proportions for each country. There are three goods, two final and one purely intermediate and essential (the third good, which one might conceive of as electricity, produced for use in producing goods 1 and 2).

We assume world final goods prices $(1,p_2)$ are compatible with full diversification in each country under the NTIIG condition.[2] Thus in country A, we have

$$a_{N1}x_1^A + a_{N2}x_2^A + a_{N3}x_3^A = N^A \tag{1}$$

$$a_{L1}x_1^A + a_{L2}x_2^A + a_{L3}x_3^A = L^A \tag{2}$$

$$a_{31}x_1^A + a_{32}x_2^A - x_3^A = 0 \tag{3}$$

where a_{Ni} is labor per unit of output i in equilibrium, a_{Li} is land per unit of output i in equilibrium, and a_{3i} is intermediate good per unit of i in equilibrium. N^A and L^A are endowments of labor and land in country A and (x_1^A, x_2^A, x_3^A) is the equilibrium output vector for country A, given final goods prices, 1 and p_2 for outputs 1 and 2 respectively.

This output vector is "sustained" in equilibrium by input prices, w, r, z, satisfying

$$a_{N1}w + a_{L1}r + a_{31}z = 1 \tag{4}$$

$$a_{N2}w + a_{L2}r + a_{32}z = p_2 \tag{5}$$

$$a_{N3}w + a_{L3}r - z = 0 \tag{6}$$

---

[2]Diversification depends simultaneously on the values in the final goods price vector, the values of endowments, and the exact specification of technology. The link between diversification (each potential output, actually produced in an equilibrium) and factor price equalization is subtle and is the subject of a voluminous body of analysis. Dixit and Norman [1980; pp. 52-53 and 120-122] is a good introduction.

where w is the price of labor, r the price of land and z the price of the intermediate good.

Under factor price equalization, (4), (5) and (6) will obtain exactly in country B as well. Given the distinct endowment vector (N^B, L^B) in country B, there will be a distinct output vector (x_1^B, x_2^B, x_3^B) solving B's corresponding equations (1), (2), and (3) at the same a_{ij}'s (input intensities). Corresponding to world prices $(1,p_2)$ is a world output vector $(x_1^W, x_2^W, x_3^W) = (x_1^A+x_1^B, x_2^A+x_2^B, x_3^A+x_3^B)$.

In (1) - (3), we can substitute x_3^A from (3) into (1) and (2) to get

$$[a_{N1} + a_{31}a_{N3}]x_1^A + [a_{N2} + a_{32}a_{N3}]x_2^A = N^A \tag{7}$$

$$[a_{L1} + a_{31}a_{L3}]x_1^A + [a_{L2} + a_{32}a_{L3}]x_2^A = L^A \tag{8}$$

which can be interpreted as an almost standard two good, two factor model. Also price z (for the intermediate good) in (6) can be substituted in (4) and (5) to yield

$$[a_{N1} + a_{31}a_{N3}]w + [a_{L1} + a_{31}a_{L3}]r = 1 \tag{9}$$

$$[a_{N2} + a_{32}a_{N3}]w + [a_{L2} + a_{32}a_{L3}]r = p_2 \tag{10}$$

We can solve (9) and (10) for w and r:

$$w = \{[a_{L2} + a_{32}a_{L3}] - p_2\cdot[a_{L1} + a_{31}a_{L3}]\}/D \tag{11}$$

$$r = \{p_2\cdot[a_{N1} + a_{31}a_{N3}] - [a_{N2} + a_{32}a_{N3}]\}/D \tag{12}$$

where $D = a_{N1}a_{L2} - a_{N2}a_{L1} + a_{N1}a_{32}a_{L3} - a_{N2}a_{31}a_{L3} + a_{L2}a_{31}a_{N3} - a_{L1}a_{32}a_{N3}$. This allows us to define intermediate good price $z(=a_{N3}w + a_{L3}r)$ in terms of final goods prices. Let us indicate this substitution for w and r as complete by expressing z as $z(1,p_2)$. This expression for z will be used below.

Clearly this trade in final goods (NTIIG) equilibrium yields the same world output vector (x_1^W, x_2^W, x_3^W) that would obtain if the two countries endowments were merged. That is

$$Ax^A + Ax^B = A[x^A + x^B] = Ax^W = e^A + e^B = e^W$$

where $x^A \equiv (x_1^A, x_2^A, x_3^A)^T$ in (1), (2), (3), x^B is similarly defined, $x^W \equiv x^A + x^B$, $e^A = (N^A, L^A, 0)^T$, $e^B = (N^B, L^B, 0)^T$ and $e^W \equiv e^A + e^B$. Superscript T indicates transposse (here changing a row vector to a column vector).

$$A \equiv \begin{pmatrix} a_{N1}, & a_{N2}, & a_{N3} \\ a_{L1}, & a_{L2}, & a_{L3} \\ a_{31}, & a_{32}, & -1 \end{pmatrix}.$$

It is not true that, for a given world price vector $(1, p_2)$ and a corresponding equilibrium matrix of input intensities A and a world output vector x^W, a NTIIG equilibrium with $e^W = e^A + e^A$ will support the world output vector. The reason is the FPE may not obtain for the endowment vectors e^A and e^B. This lack of FPE implies of course distinct input intensities at the NTIIG equilibrium for each country. We observe an example illustrating this (presumably well-known) point in Table 4. This example illustrates the point the world output vector x^W achievable with pooled factor endowments can be attained under TIIG in some circumstances while not under NTIIG. In other words there are cases in which there are full gains from trade under TIIG and only partial gains for the analogous case under NTIIG. Thus all world output vectors attainable under NTIIG are attainable under TIIG but all world output vectors attainable under TIIG with FPE are not attainable under NTIIG. (Without the qualification "with FPE" the previous sentence would seem to be making a commonplace assertion.)

Factor Price Equalized and Trade in Intermediate Goods

Consider the above two country model but now with trade "permitted" in the essential intermediate good. As Batra and Casas [1973, p. 306] indicate, since factor prices were equalized above for the case of NTIIG, the price of the intermediate good was the same in each country and there was no incentive to trade the intermediate good. Moreover we noted that the NTIIG equilibrium supported the world output vector obtaining when each country's endowments were pooled. Be that as it may, we turn to the TIIG equilibrium and we observe a specific multiplicity of patterns of trade supporting the identical world output vector observed above, given particular world final goods prices, $(1,p_2)$. The TIIG equilibrium comprises five materials balance relations. Each country will have factor demand equal to factor supply at an interior point. These are four equations, two for each country since each has an endowment of two factors. Then there is the condition indicating world production of the intermediate good in the two countries equals world demand for the intermediate good. See (13), (14), (15), (16), and (17) below for one possible equilibrium.[3]

Corresponding to world final goods prices $(1, p_2)$ will be a world output vector satisfying

$$a_{N1}x_1^A + a_{N3}x_3^A = N^A \tag{13}$$

$$a_{L1}x_1^A + a_{L3}x_3^A = L^A \tag{14}$$

[3]We obtained an equilibrium with FPE under NTIIG on the computer and resolved with TIIG. The solution algorithm (LINDO linear program) produced an equilibrium as in (13) - (17). See Table 2. An alternative approach would be to follow the insight of Batra and Casas and to introduce a small amount of trade in the intermediate good exogenously at the NTIIG. Keep increasing the volume of trade exogenously step by step until the value of world output begins to decline. At the NTIIG "margin", it does not matter which country becomes the exporter and which the importer in the initial introduction of trade in the intermediate goods. We refer to the two possible directions below as "partner equilibria".

$$a_{31}x_1^A - x_3^A + a_{31}x_1^B + a_{32}x_2^B - x_3^B = 0 \tag{15}$$

$$a_{L1}x_1^B + a_{L2}x_2^B + a_{L3}x_3^B = L^B \tag{16}$$

$$a_{N1}x_1^B + a_{N2}x_2^B + a_{N3}x_3^B = N^B \tag{17}$$

where the a_{ij}'s are the same as those above (same input intensities) but the output vector in country A, namely (x_1^A, x_3^A), and in B, namely (x_1^B, x_2^B, x_3^B), are different from those above for the NTIIG case. However this world output vector $(x_1^A + x_1^B, x_2^B, x_3^A + x_3^B)$, will be identical with the world output vector above. (13) - (17) comprises one TIIG equilibrium. Since $x_2^A = 0$, it is a distinct pattern of specialization[4] among many compared with that under the NTIIG regime. An example is reported below.

Corresponding to (13) - (17) will be equilibrium input prices satisfying

$$a_{N1}w + a_{L1}r + a_{31}z = 1 \tag{18}$$

$$a_{N3}w + a_{L3}r - z = 0 \tag{19}$$

$$a_{31}z + a_{L1}r + a_{N1}w = 1 \tag{20}$$

$$a_{32}z + a_{L2}r + q_{N2}w = p_2 \tag{21}$$

$$-z + a_{L3}r + a_{N3}w = 0 \tag{22}$$

where (18) and (19) relate to country A and (20) - (22) to country B. The input price vector (w,r,z) in (18) - (22) will be the same as for the one observed for the NTIIG equilibrium above

[4]Why does the exporter of the intermediate good end up specialized in one final good? It is possible that the exporter ends up diversified in the final goods. We observe this case in Table 4 and it is illustrated in Figure 3. The scope of specialization by the exporter of the intermediate good coincides, roughly speaking, with range of patterns of trade under one set of factor prices. In our examples here, factor price equalization obtains easily (for a wide range of world final goods prices) in part because our two countries have very similar factor endowments. But the comment in footnote 2 is important in this regard.

given the same world final goods prices $(1, p_2)$.[5]

To prove this result, we observe that the equilibrium in (13) - (17) can be expressed as

$$(a_{N1} + a_{31}a_{N3})\hat{x}_1^A + a_{N3}\hat{E}^A = N^A \tag{23}$$

$$(a_{L1} + a_{31}a_{L3})\hat{x}_1^A + a_{L3}\hat{E}^A = L^A \tag{24}$$

where $\hat{x}_1^A = x_1^A$ (in (13) - (17)) and $\hat{E}^A$ is the quantity of the intermediate good exported from A to B and

$$a_{N1}\,\hat{x}_1^B + a_{N2}\,\hat{x}_2^B + a_{N3}\,\hat{x}_3^B = N^B \tag{25}$$

$$a_{L1}\,\hat{x}_1^B + a_{L2}\,\hat{x}_2^B + a_{L3}\,\hat{x}_3^B = L^B \tag{26}$$

$$a_{31}\,\hat{x}_1^B + a_{32}\,\hat{x}_2^B - \hat{x}_3^B = \hat{E}^A \tag{27}$$

where $\hat{x}_1^B = x_1^B$ (in (13) - (17)) and similarly for $\hat{x}_2^B$ and $\hat{x}_3^B$. Equilibrium in country B in (25) - (27) has factor prices $\hat{w}^B$, $\hat{r}^B$, $\hat{z}^B$ satisfying

$$a_{N1}\hat{w}^B + a_{L1}\,\hat{r}^B + a_{31}\hat{z}^B = 1 \tag{28}$$

$$a_{N2}\hat{w}^B + a_{L2}\,\hat{r}^B + a_{32}\hat{z}^B = p_2 \tag{29}$$

$$a_{N3}\hat{w}^B + a_{L3}\,\hat{r}^B - \hat{z}^B = 0 \tag{30}$$

Since (28) - (30) is the same as (4), (5) and (6), then factor prices $(\hat{w}^B,\hat{r}^B,\hat{z}^B)$ are the same as those for the case of NTIIG.

Corresponding to (23) and (24) for country A are factor prices $(\hat{w}^A, \hat{r}^A)$ satisfying

$$(a_{N1} + a_{31}a_{N3})\hat{w}^A + (a_{L1} + a_{31}a_{L3})\hat{r}^A = 1 \tag{31}$$

$$a_{N3}\,\hat{w}^A + a_{L3}\,\hat{r}^A = \hat{z}^A. \tag{32}$$

---

[5]More precisely, we have with world prices $(1,p_2)$, under NTIIG, an equilibrium with FPE. Under TIIG we have an equilibrium (13 - 17) that is efficient for world price vector $(1,p_2)$. We now observe that FPE obtains for this TIIG equilibrium and the factor prices are the same for the two problems.

We now observe[6] that if $\hat{z}^A = z(1,p_2)$, this latter defined in the NTIIG equilibrium, then $\hat{w}^A = w$ (this latter defined in the NTIIG equilibrium) and $\hat{r}^A = r$ (this latter defined in the NTIIG equilibrium). The proof proceeds by direct substitution. First, from (31) and (32)

$$\hat{w}^A = \{a_{L3} - z(1,p_2)(a_{L1} + a_{31}a_{L3})\}/D^A \tag{33}$$

where $D^A = a_{N1}a_{L3} - a_{L1}a_{N3}$

Then $$\hat{w}^A = \{a_{L3} - (wa_{N3} + ra_{L3})(a_{L1} + a_{31}a_{L3})\}/D^A \tag{34}$$

If one substitutes for w from (11) and r from (12), one obtains an expression for $\hat{w}^A$ the same as that in (11) for w. Hence $\hat{w}^A = w$. (See the Appendix 1)

By a similar argument, one obtains $\hat{r}^A = r$. It follows that $\hat{x}_1^A + z(1,p_2)\hat{E}^A = wN^A + rL^A$ and $\hat{x}_1^B + p_2\hat{x}_2^B = wN^B + rL^B + z(1,p_2)\hat{E}^A$. Hence the value of world output at prices $(1,p_2)$ is the same under our TIIG equilibrium in (13) - (17) as under the NTIIG equilibrium. It follows that the world output vector under the TIIG regime is the same as that under the NTIIG regime, given the same vector of world final goods prices. One might jump to the example below to see these results illustrated.

Consider a partner trade pattern to that above (partner's meaning will become clear). Now country A specializes in good 2 and also exports the intermediate good. Country B is in the same position as above. We have the TIIG equilibrium

$$a_{N2}\tilde{x}_2^A + a_{N3}\tilde{x}_3^A = N^A \tag{35}$$

$$a_{L2}\tilde{x}_2^A + a_{L3}\tilde{x}_3^A = L^A \tag{36}$$

$$a_{32}\tilde{x}_2^A - \tilde{x}_3^A + a_{31}\tilde{x}_3^B + a_{32}\tilde{x}_2^B - \tilde{x}_3^B = 0 \tag{37}$$

---

[6]Free trade in intermediate goods implies $\hat{z}^A = \hat{z}^B$. $\hat{z}^B$ was defined with factor prices we just showed were the same as those for B under NTIIG. Hence $\hat{z}^A = \hat{z}^B = z(1,p_2)$.

$$a_{L1}\tilde{x}_1^B + a_{L2}\tilde{x}_2^B + a_{L3}\tilde{x}_3^B = L^B \tag{38}$$

$$a_{N1}\tilde{x}_1^B + a_{N2}\tilde{x}_2^B + a_{N3}\tilde{x}_3^B = N^B \tag{39}$$

This equilibrium corresponds[7] to that in (13) - (17) above. It can be expressed as (25) - (27) above and our earlier results hold: factor prices will be the same as those under NTIIG and the world output vector under NTIIG will be achieved. The demonstration follows that above.

Clearly countries A and B are each specialized differently between the equilibrium in (13) - (17) and (35) - (39). And they must be indifferent between an appropriately defined convex combination of these two partner equilibria. The convex combination is defined as γ varies between 0 and 1 in the equilibrium $(\gamma\tilde{x}_1^A,(1-\gamma)\tilde{x}_2^A,\ \gamma\hat{E}^A + (1-\gamma)\tilde{E}^A)$ for country A and $x_1^B(\gamma),x_2^B(\gamma)$, and $x_3^B(\gamma)$ for country B in

$$a_{N1}x_1^B(\gamma) + a_{N2}x_2^B(\gamma) + a_{N3}x_3^B(\gamma) = N^B$$

$$a_{L1}x_1^B(\gamma) + a_{L2}x_2^B(\gamma) + a_{L3}x_3^B(\gamma) = L^B$$

$$a_{31}x_1^B(\gamma) + a_{32}x_2^B(\gamma) - x_3^B(\gamma) = \gamma\hat{E}^A + (1-\gamma)\tilde{E}^B$$

There is a simple three dimensional figure which captures the continuum of equilibrium (as γ varies between 0 and 1).

Figure 1

In Figure 1, the export from country A is on the vertical axis. The quantities of the final goods are on the horizontal axes. Line CD is the continuum of equilibria, given a specific world price vector $(1,p_2)$ for final goods. We can project CD onto the (x_1,x_2) plane. Then line $(\hat{x}_1^A,\tilde{x}_2^A)$

[7]Our solution algorithm could have generated the solution in (35) - (39) instead of that in (13) - (17). Recall footnote 3.

captures the continuum of equilibria. We can add world outputs x_1^W and x_2^W corresponding to world price vector $(1,p_2)$. Then outputs of goods 1 and 2 not produced by country A are the equilibrium outputs produced by country B.

It will be useful later to note here that varying γ between 0 and 1 fails to capture the NTIIG equilibrium. Relative to the CD continuum in Figure 1, the NTIIG equilibrium for world price vector $(1,p_2)$ is sui generis. There is, however, an additional continuum of equilibria, with the same world final goods price vector, associated with country B being an exporter of the intermediate good. The partner equilibria correspond to the two in (13) - (17) and (35) - (39) above. We could then generate the analogue to CD in Figure 1. This additional continuum (with country B as the exporter of the intermediate) completes a description of the multiplicity of patterns of specialization in the two countries under TIIG. There are two linear segments, one corresponding to country A acting as exporter of the intermediate good and the other corresponding to country B acting as the exporter of the intermediate good. And there is the NTIIG equilibrium which sustains the same world vector of final goods.

Example

We approximate smooth unit isoquants for the three goods by seven processes; a series of linked flat segments approximates the smooth isoquant. See Figure 1. The technologies are defined by seven processes for each good in Table 1.

Table 1

Factor endowments are $(N^A,L^A) = (42,30)$ and $(N^B,L^B) = (40,30)$. For any final good price vector, we maximize the value of world output subject to factor demands not exceeding factor supplies in each country and the appropriate supply exceeding demand for intermediate goods. For each world price vector, we solved for three distinct equilibria: first with pooled factor supplies (merge solution), then with NTIIG and then with TIIG. We report in Table 2 only the latter two since the merge solution has the same factor prices and world output vector as do the corresponding TIIG and NTIIG cases. The world output for commodity i is the sum of the outputs of commodity i by the two countries.

Table 2

In Table 2 we report two country trade equilibria with our two final goods and one intermediate good. Given a particular vector of world final goods prices, we solved by linear programming (LINDO software). The software selects its own starting point and moves to one optimal solution. The appearance of a best solution as an optimum optimorum is illusory. Thus in Table 2 we have indeed efficient world patterns of specialization but they may not be unique. We know in fact that under TIIG they are not unique.

In Table 2, the world final goods prices range from $(p_1,p_2) = (1,.9)$ to $(1,1.1)$. V^W is the value of world output at each equilibrium. T indicates a TIIG equilibrium and NT a NTIIG equilibrium. x_{ij} means the level of activity j in producing good i. Goods 1 and 2 are final and good 3 is intermediate. FP indicates factor prices and these are the shadow prices generated by the linear programming algorithm. They are the same in each country in all cases. Observe that

for p_2 between 0.9 and 0.94, no commodity 2 is produced in either country. Factor prices are still equalized though in the degenerate sense that each factor is being assigned the identical price. Yet later we continue to see the absence of diversification and yet factor price equalization obtaining (as for $(p_1,p_2) = (1,.99)$ and TIIG and country A not diversified).[8]

For p_2 between .95 and 1.05 we see some production in the world of each final good. For high values of p_2 (eg. 1.09 and 1.1) neither country produces good 1 and factor price equalization is observed. In all cases factor prices are equalized and are the same under TIIG and NTIIG. Recall that in the cases in Table 2, each country has a similar endowment to the other country. In all cases in Table 2, each country produces some of the intermediate good in equilibrium. Moreover when a country is specialized in producing only one final good, it is also exporting the intermediate good. These equilibria were sketched in Figure 1. (Below in Table 4 we observe cases in which only one country produces the intermediate good.)

Identical Countries and Specialization with Trade in Intermediate Goods

Our central result on the world output vector supported by many distinct patterns of trade given factor price equalization for the NTIIG regime holds for two countries with identical factor endowments. Thus for the NTIIG regime, each country will, given a world price vector compatible with factor price equalization, have an identical output vector but for the same world

[8]Our discrete approximation to smooth isoquants allows one commodity to be produced in equilibrium with two processes. Roughly speaking one commodity is in one sense playing the role of two commodities in this case. This allows for factor price equalization to be observed without full diversification in the production of final goods. This raises the issue of the empirical relevance of diversification for factor price equalization. Multiple "substitute" processes can lead to FPE without diversification, as our examples make clear.

prices will under the TIIG regime have distinct output vectors. The distinguishing feature of the identical country case is that the corresponding CD partner schedules (one for country A as exporter of the intermediate good and the other for country B as exporter of the intermediate good) are identical. But at any point on either schedule there is an essential asymmetry in the vectors of outputs for each country. Identical countries end up in trade and specializing relatively in different final goods, and in the production of the intermediate good.

We computed an example based on the same technology set out above. Each country has endowment $e^A = (40,30) = e^B$. See Table 3.

Table 3

The novel element illustrated in Table 3 is the non-symmetrical pattern of production across countries under TIIG. The "default option" is of course no trade in intermediate goods, costing nothing in terms of the value of world output foregone. Of interest also is how the TIIG does a mirror-flip as prices change from $(p_1,p_2) = (1,.99)$ to $(1,1.01)$. Country A's production vector becomes country B's in the price change and vice versa for country B. We repeat that a TIIG equilibrium is one of a continuous set. The solution algorithm on the computer produces merely one equilibrium from this set (corresponding to two schedules analogous to CD in Figure 1.)

Factor Prices Not Equalized

We leave the two country world with the same total factor endowment and technology,

and we now divide the factors between countries in "a more skewed" mode. Country A's endowment is now $e^A = (47,10)$ and B's endowment is $e^A = (35,50)$. First, with endowments pooled, the world production possibilities are the same as those reported in Table 2 for the merged equilibrium. Our benchmark of maximum gains from trade remains unchanged. We re-compute the NTIIG equilibrium and TIIG equilibrium for a particular final goods price vector. We then re-compute for other final goods price vectors. We report our results in Table 4.

Table 4

There are some interesting cases in Table 4. Of primary interest are those (p_2=.95 and p_2=.99) in which the TIIG equilibria achieve the same value of world output as one achieves when endowments are merged. Factor price equalization also obtains for these cases. The corresponding cases of NTIIG do not achieve either FPE or the maximum value of world output. (The patterns of specialization for each world price vector are the same.) These cases illustrate the gains from trade in intermediate goods. We observe in all TIIG cases in Table 4 that country A produces no intermediate good. Our earlier argument used to characterize the multiplicity of equilibria illustrated in Figure 1 applies but takes on a particular form. (There the country exporting the intermediate good was not completely diversified in producing the two final goods.) Consider the convex combination mapped by CD in Figure 1. Suppose that at one or both ends of CD a large amount of the intermediate good is being produced, large enough to supply all the requirements of both countries at that world price vector $(1,p_2)$. An interior solution with no excess production of the intermediate good suggests an equilibrium for the

country exporting the intermediate good strictly interior to CD. This is what we observe in Table 4. The exporter of the intermediate good is diversified in producing the two final goods (is interior to CD). Moreover it is interior at a point at which the country importing the intermediate good produces no intermediate good itself. We illustrate in Figure 3.

Figure 3

In Figure 3, C′D′ is the same type of schedule described in detail before Figure 1. It is projected into the (x_1,x_2) plane in the same way we observed in Figure 1. However in Figure 3, a point in km is associated with an output level of the intermediate good in excess of world needs. This leaves a point in gk as a possible equilibrium. Our examples in Table 4 are at point k, where the exporting country is supplying exactly all the world's requirements of the intermediate good and is itself producing some of the two final goods. Note that the multiplicity of equilibria remain, though a NTIIG equilibrium is not among the set of efficient equilibria.

The second interesting point illustrated in Table 4 is the partial factor price equalization under TIIG achieved for $p_2 = 1.1$. In this case, country B's factor prices (and the world price of the intermediate good) are the same as those prices achieved under a pooling of the two countries' endowments. (Those same factor prices show up in Table 2.) Country A's factor prices are not those corresponding to the merged equilibrium, though they are close. This approximate factor price equalization case has a value of world output of 7.618962 compared with the maximum value (in Table 2) of 7.662066.

Thirdly each case in Table 4 has the NTIIG outcome with a world output value less than that achieved under TIIG. There are unambiguous gains from trade in intermediate goods in these cases. (These cases differ only from those reported in Table 2 in the sense that endowment vectors here in each country are with respect to each other relatively skewed. The earlier endowment vectors were similar though the world endowments are the same in the two cases.)

Three Primary Factors in Each Country

One might infer that (a) the indeterminacy in the pattern of trade under FPE and TIIG above, and (b) the absence of gains from trade in intermediate goods given FPE under NTIIG was a consequence of more goods (two final plus one intermediate) thean primary factors (two) in each country. This view has much merit. If each of our countries had three primary factors, then under NTIIG and complete diversification in production in each country, each country's output vector at world prices $(1,p_2)$ would be a four equation system (three primary factor balance relations plus an intermediate good materials balance constraint) in three output levels. We report this "problem" below

$$a_{N1}{}^{A}x_1{}^{A} + a_{N2}{}^{A}x_2{}^{A} + a_{N3}{}^{A}\, x_3{}^{A} \leqslant N^{A}$$

$$a_{L1}{}^{A}x_1{}^{A} + a_{L2}{}^{A}x_2{}^{A} + a_{L3}{}^{A}\, x_3{}^{A} \leqslant L^{A}$$

$$a_{M1}{}^{A}x_1{}^{A} + a_{M2}{}^{A}x_2{}^{A} + a_{M3}{}^{A}\, x_3{}^{A} \leqslant M^{A}$$

$$a_{31}{}^{A}x_1{}^{A} + a_{32}{}^{A}x_2{}^{A} - 1x_3{}^{A} = 0$$

where M is the new primary factor. There is an analogous system for country B. Under NTIIG the demand and supply for the essential intermediate good will solve as an <u>equality</u> because (a) it is essential and (b) primary factors would be used unecessarily if it were an inequality. The

value of country A's output will be $1x_1^A + p_2x_2^A$. One could substitute from x_3^A in the fourth equation in the first three as we did earlier in our analysis (the two primary factor case) and obtain a system of two final goods in three primary factors. (The same could be done for country B.) In such three equation (in fact, inequalities), two unknown systems, one equation is redundant. It makes most economic sense to say that in each country one primary factor will in general be in excess supply and command a zero price. there is no presumption that it will be the same primary factor in each country. In general there will be an absence of factor price equalization.[9] Hence production coefficients (a_{ij}'s) will differ between countries. Also in general, the price of the untraded intermediate good will differ between countries. Thus at these same prices for the two final goods, under a regime of free trade in the intermediate good, the value of world output will in general rise relative to the case of NTIIG. The price of the intermediate good will become the same in both countries.

Under TIIG and diversification in each country, the world output vector will comprise six production levels and there will be seven constraints (three primary factor balance relations in each country plus one materials balance relation for the traded intermediate good). One primary factor will be in excess supply in one country and its price can be taken as zero. (The materials balance relation for the intermediate good will solve as an equality.) Hence there will not be factor price equalization. In the absence of trade in the intermediate good <u>each country had one redundant primary factor</u> making a total of two. Under TIIG, there will in general be only one redundant primary factor in the two country world. This is another way of seeing that the world trading system is more efficient under a TIIG regime.

---

[9]See Ethier [1984] for a discussion of FPE and more factors than goods.

A summarizing statement at this point would be: in the absence of factor price equalization under NTIIG, there are gains from opening up trade in the intermediate good. Also the multiplicity of patterns of trade, given one world price vector for final goods, disappears with three factors instead of two. However, the intermediateness of the third good in this three good, three factor, two country world clearly matters. The intermediateness prevents factor price equalization from obtaining and this in one sense opens the door to gains from trade in the intermediate good.

More Intermediate Goods and More Countries

With two essential intermediate goods (and two primary factors, and two countries), possible patterns of trade under FPE and TIIG expand relative to the case of a single essential intermediate good.[10] The earlier central result obtains: the factor prices which are equalized between countries under NTIIG, given a world final goods vector, remain the equilibrium factor prices for a diverse collection of patterns of trade under TIIG. The above "CD construction" in Figures 1 and 3 requires extension. Roughly speaking, two tradable intermediate goods instead of one open up more "degrees of freedom". Given a world final goods price vector and FPE under NTIIG we will take up three cases in brief.

1. Country B produces and exports good 3 (intermediate) and imports good 4 (intermediate). Country A is fully diversified. B is specialized in goods 1 and 3.

[10]Warne [1971] sketched a treatment of this two intermediate good case with a graphical apparatus. Though the analysis was sketchy, Warne discovered that for a given world final goods price vector, there could be many patterns of trade, each associated with the same value of world output. See Appendix 2.

The world trading system comprises the following six equations in x_1^A, x_2^A, x_3^A, x_4^A, x_1^B, x_3^B. (The new intermediate good is good 4.)

$$a_{N1}x_1^A + a_{N2}x_2^A + a_{N3}x_3^A + a_{N4}x_4^A = N^A \tag{40}$$

$$a_{L1}x_1^A + a_{L2}x_2^A + a_{L3}x_3^A + a_{L4}x_4^A = L^A \tag{41}$$

$$a_{N1}x_1^B + a_{N3}x_3^B = N^B \tag{42}$$

$$a_{L1}x_1^B + a_{L3}x_3^B = L^B \tag{43}$$

$$a_{31}x_1^A + a_{32}x_2^A - x_3^A + a_{34}x_4^A + a_{31}x_1^B - x_3^B = 0 \tag{44}$$

$$a_{41}x_1^A + a_{42}x_2^A + a_{43}x_3^A - x_4 + a_{41}x_1^B + a_{43}x_3^B = 0 \tag{45}$$

Factor price equalization yields equal factor intensities (technical coefficient) in use of inputs between countries. World output will be $(x_1^A + x_1^B, x_2^A)$. Goods 3 and 4 are purely intermediate. The exports of good 4 from country A are defined by $E_4^A = a_{41}x_1^B + a_{43}x_3^B$.

In country B, x_3^B can be separated into exports E_3^B plus local use $a_{31}x_1^B$. Country B can then be represented by

$$[a_{N1} + a_{31}a_{N3}]x_1^B + a_{N3}E_3^B = N^B$$

$$[a_{L1} + a_{31}a_{L3}]x_1^B + a_{L3}E_3^B = L^B$$

(Our earlier analysis in Appendix 1 could show factor prices in this system for country B are the same as those under FPE and NTIIG.) Also imports of good 4 can be expressed as

$$[a_{41} + a_{31}a_{43}]x_1^B + a_{43}E_3^B = M_4^B$$

where M_4^B is imports of good 4 by country B. With these transformations in mind, we can represent the equilibrium in (40) - (45) as the pair of points D'' and G in Figure 4.

Figure 4

If good 2 were produced in country B in place of good 1, the system would be defined by points

C″ and F in Figure 4. Note the negative part of the vertical axis represents imports of good 4 to country B. This part is the extension of Figure 1 to our new case of two intermediate goods. Line HI is country B's production possibility curve, given that it is not fully diversified. The line HI is traced out by taking a convex combination of two extreme equilibria. We set this construction out earlier. Given world outputs corresponding to pair D″, G and pair C″ and F, country A's production possibilities can be traced out as the residual. It too will be linear. (Recall such a construction in Figure 1.)

We could make country B diversified and set out the partner equilibria for the system in another Figure like Figure 4.

2. Country B exports good 4 and both produces and imports good 3. (It also produces final good 1.) Country A exports good 3 and produces none of good 4. (It also produces final goods 1 and 2.)

The six equation interior equilibrium, given world final goods price vector and FPE, is

$$a_{N1}x_1^A + a_{N2}x_2^A + a_{N3}x_3^A = N^A \tag{46}$$

$$a_{L1}x_1^A + a_{L2}x_2^A + a_{L3}x_3^A = L^A \tag{47}$$

$$a_{N1}x_1^B + a_{N3}x_3^B + a_{N4}x_4^B = N^B \tag{48}$$

$$a_{L1}x_1^B + a_{L3}x_3^B + a_{L4}x_4^B = L^B \tag{49}$$

$$a_{31}x_1^A + a_{32}x_2^A - x_3^A + a_{31}x_1^B - x_3^B + a_{34}x_4^B = 0 \tag{50}$$

$$a_{41}x_1^A + a_{42}x_2^A + a_{43}x_3^A + a_{41}x_1^B + a_{43}x_3^B - x_4^B = 0 \tag{51}$$

Now exports $E_3^A = x_3^A - a_{31}x_1^A - a_{32}x_2^A$ $(=M_3^B)$ and $E_4^B = x_4^B - a_{41}x_1^B - a_{43}x_3^B$ $(=M_4^A)$. We can consolidate the system in (46) - (51) as we did in case 1 above. We move to Figure 5, capturing the equilibrium in (46) - (51) for country A.

Figure 5

The pair of points J,K represent the equilibrium for country A. As x_1^B tends to zero and becomes replaced by output x_2^B, A's production possibility curve ML is traced out. There will be a Figure, like 4, for country B, corresponding to Figure 5 for country A. And partner diagrms could be drawn for the case of country B exporting intermediate good 3 rather than good 4. The range of possible patterns of trade is large.

3. Country A exports goods 3 and 4 (the two intermediates) in return for some final good or goods from B. B produces good 3 but exports no intermediate goods.

This case is the two intermediate good analogue to our one intermediate good case in the sense that one country exports intermediate goods in return for final goods. Each country is now not an exporter of an intermediate good. In this case a world trade equilibrium under FPE for a given world final goods vector is:

$$a_{N1}x_1^A + a_{N3}x_3^A + a_{N4}x_4^A = N^A \tag{52}$$

$$a_{L1}x_1^A + a_{L3}x_3^A + a_{L4}x_4^A = L^A \tag{53}$$

$$a_{N1}x_1^B + a_{N2}x_2^B + a_{N3}x_3^B = N^B \tag{54}$$

$$a_{L1}x_1^B + a_{L2}x_2^B + a_{L3}x_3^B = L^B \tag{55}$$

$$a_{31}x_1^A - x_3^A + a_{34}x_4^A + a_{31}x_1^B + a_{32}x_2^B - x_3^B = 0 \tag{56}$$

$$a_{41}x_1^A + a_{43}x_3^A - x_4^A + a_{41}x_1^B + a_{42}x_2^B + a_{43}x_3^B = 0 \tag{57}$$

We can separate x_3^A and x_4^A into exports E_3^A and E_4^B respectively and local use. Country A's production possibilities can be traced out graphically as in Figure 4 but now each vertical axis will be representing <u>exports</u> from A (not one axis with exports and one with imports).

Needless to say, the case of FPE under NTIIG remains special. There could be no possible FPE and we would observe again how TIIG enlarges world production possibilities.

In terms of our diagrammatic rendering of equilibria under TIIG and FPE, simple lines with one essential intermediate good (lines like CD in Figure 1) become pairs of lines with two intermediate goods (as in Figures 4 and 5). More intermediate goods expands admissable patterns of trade. One could extrapolate to cases of three and more intermediate goods. Remaining with two final goods and two countries simplifies matters considerably.

Thus with three countries (each with two primary factors) two final goods and one tradable essential intermediate good, a TIIG equilibrium given a world price vector for final goods will be seven equations (six for primary factor materials balance in the three countries plus one world balance relation for the traded intermediate good.) The nine equations for NTIIG have become seven. With two countries the six equations under NTIIG become five. There is a suggestion of increased specialization in production of the intermediate good as more countries are involved in a TIIG equilibrium. With twenty countries, sixty equations under NTIIG become forty-one. 3n countries under NTIIG are tending to 2n. Given FPE and NTIIG, at the margin the world is indifferent about where production of the intermediate good is concentrated under TIIG. Our analysis above indicated admissable patterns of specialization for two countries. Clearly delimiting analogous ranges for three or more countries becomes a large exercise in taxonomy. We do not pursue this exercise. The central message however remains unchanged. Under FPE and TIIG, the observed pattern of trade is "fortuitous", a member of range of possible patterns of trade.

Concluding Remarks

We have seen how TIIG implies multiple equilibria given FPE and the nature of those equilibria. Of interest is how TIIG leads to equilibria associated with relative specialization in countries, even identical countries. Ultimately TIIG yields higher world output than NTIIG, the case of FPE and NTIIG being somewhat a special case in which world outputs are the same under TIIG and NTIIG. We indicated that two primary factors "contributed to" the multiplicity of patterns of trade by examining the case of three primary factors. But the crux of the multiplicity is not simply a number of goods, number of factors question. We also considered the symmetric case of two essential intermediate goods.

Appendix 1: Factor Prices in the NTIIG and TIIG Equilibria with FPE

We take world final goods price vector $(p_1,p_2) = (1,p_2)$ and obtain the corresponding factor prices (w,r) and intermediate goods price z, assuming NTIIG but free trade in final goods. We assume FPE obtains. These factor prices are (11) and (12) in the text which we record here with some collecting of terms as

$$w = [(a_{L2} + a_{32}a_{L3}) - p_2(a_{L1} + a_{31}a_{L3})]/D \qquad \text{A1}$$

$$r = [p_2(a_{N1} + a_{31}a_{N3}) - (a_{N2} + a_{32}a_{N3})]/D \qquad \text{A2}$$

$$D = a_{N1}a_{L2} - a_{N2}a_{L1} + a_{N1}a_{32}a_{L3} - a_{N2}a_{31}a_{L3} + a_{L2}a_{31}a_{N3} - a_{L1}a_{32}a_{N3}.$$

The intermediate goods price is then

$$z = a_{N3}w + a_{L3}r. \qquad \text{A3}$$

We wish to show that factor prices $(\hat{w},\hat{r})$ under TIIG are the same as (w,r). (31) and (32) define $(\hat{w},\hat{r})$. $\hat{z}$ in (32) is taken from z above ($\hat{z}$ is defined from z). ((31) and (32) are defined for a particular pattern of trade. We work from this arbitrary pattern for specificity. Our demonstration holds for the corresponding $(\hat{w},\hat{r})$ defined in any admissable pattern defined in the text.)

From (31) and (32) we obtain

$$\hat{w} = [z(a_{L1} + a_{31}a_{L3}) - a_{L3}]/\hat{D} \qquad \text{A4}$$

$$\hat{r} = [a_{N3} - z(a_{N1} + a_{31}a_{N3})]/\hat{D} \qquad \text{A5}$$

where $\hat{D} = a_{N1}a_{L1} - a_{L3}a_{N1}$

Substitution for z from A3 in A4 and A5 yields

$$\hat{w} = \{[a_{N3}w + a_{L3}r]\,[\,a_{L1} + a_{31}a_{L3}] - a_{L3}\}/\hat{D} \qquad \text{A6}$$

$$\hat{r} = \{a_{N3} - [a_{N3}w + a_{L3}r]\,[a_{N1} + a_{31}a_{N3}]\}/\hat{D} \qquad \text{A7}$$

Now if one substitutes in A6 and A7 for w and r from A1 and A2, one obtains expressions on the RHS's, the same as w and r in A1 and A2.

This is the key step in showing that factor prices in a NTIIG equilibrium with FPE are the same as those in a corresponding TIIG equilibrium, this latter equilibrium being one of a continuum.

Appendix 2: Background Notes

The first investigation of trade in intermediate goods was McKenzie [1954] who pointed out that TIIG would expand world production possibilities in the Frank Graham model with one primary factor. (Melvin [1969] extended this model.) And the pattern of English trade would have been dramatically different if England produced cotton. Presumably they would have exported cotton and not cloth! In his celebrated proof of existence of a competitive equilibrium, McKenzie [1954a] pointed out that the Graham model of international trade could easily accommodate intermediate goods, provided they were not tradable. "This assumption seems implicit in most models of classical trade theory." (p. 150). In McKenzie [1955], he investigated factor price equalization in an activity analysis framework and emphasized cone of diversification arguments. In the section on intermediate goods, he introduces the notion of a chain of links between countries which resembles arguments about Hawkins-Simon indecomposability but appears to sidestep an explicit formal treatment of tradable intermediate goods. He points out that when a primary factor constraint is non-binding ("saturation") in a country, there will be an incentive to make that factor mobile. Then also he notes there is " ... a strong tendency for the mobility of intermediate products, especailly agricultural and raw materials, to replace mobility of factors". (p. 254). (My (J.M.H.) reading of McKenzie's three key papers of 1954-55 suggests that McKenzie felt that the extension of the model of trade in final goods to that of trade in final and intermediate goods was not a routine matter. Jones and Neary [1984; p.32] remark that trade in intermediate goods implies that "the pattern of trade in final goods may not be readily deducible from a comparison of pre-trade relative prices in these [models]". In correspondence, Jones [1992] comments, trade in intermediate goods "does essential damage to

basic "comparative advantage" types of argument". Deardorff [1984; p.468] comments that it is unclear how the predictions of the Heckscher-Ohlin model in a two factor, two final good, two country should be interpreted "when one tries to account for intermediate goods, non-traded goods, and unbalanced trade".)

Warne [1971] discovered that trade in intermediate goods in a two final good, two primary factor, two essential intermediate good model could (a) yield no gain in the value of world output relative to no trade in intermediate goods and (b) observed that corresponding to a specific world final goods price vector, there could be a flat on a country's production possibilities set of final goods. His framework of analysis was geometrical. (His model was an intermediate input substitutibility version of Vanek [1963].Chang and Mayer [1973] and others developed Vanek's model.) Warne focused on a single country and did not link his analysis to factor price equalization and the pattern of trade. Batra and Casas [1973] related the no-gains from-trade-in-intermediate-goods proposition to factor price equalization. They did not investigate the nature of the multiplicity (continuum) of patterns of trade with trade in intermediate goods and factor price equalization. In spite of considerable subsequent analysis of generalized Stolper-Samuelson and Rybczynski theoresm with models incorporating intermediate goods (eg. Woodland [1977]) no one appears to have investigated Warne's flat on the production possibility curve. Batra and Casas [1973] do not report Warne's results, though they cite his article.

References

Batra, R.N. and F.R. Casas [1973] "Intermediate Products and the Pure Theory of International Trade: A Neo-Heckscher-Ohlin Framework", American Economic Review, 63,3, June pp. 297-311.

Chang, W.W. and W. Mayer [1973] "Intermediate Goods in a General Equilibrium Trade Model", International Economic Review, 14, 2, June, pp. 447-459.

Deardorff, A.V. [1984] "Testing Trade Theories and Predicting Trade Flows", Chapter 10 in R.W. Jones and P.B. Kenan [1984].

Dixit, A.K. and V. Norman [1980] Theory of International Trade, New York: Cambridge University Press.

Ethier, W.J. [1984] "Higher Dimensional Issues in Trade Theory" in R. Jones and P. Kenan [1984], pp. 131-184.

Jones, R.W. and J.P. Neary [1984] "The Postive Theory of International Trade", Chapter 1 in R.W. Jones and P.B. Kenan [1984].

Jones, R.W. and P.B. Kenan, eds. [1984] Handbook of International Economics, Volume 1, Amsterdam: North Holland.

McKenzie, L.W. [1954] "Specialization and Efficiency in World Production", Review of Economic Studies, XXI, pp. 165-180.

McKenzie, L. [1954a] "On Equilibrium in Graham's Model of World Trade and Other Competitive Systems", Econometrica, 22, 2, April, pp. 147-161.

McKenzie, L.W. [1955] "Equality of Factor Prices in World Trade" Econometrica, 23, 3, July, pp. 239-257.

Melvin, J.R. [1969] "Intermediate Goods, the Production Possibility Curve, and Gains from Trade", QJE, February, 83, pp. 141-151.

Vanek, J. [1963] "Variable Factor Proportions and Interindustry Flows in the Theory of International Trade" Quarterly Journal of Economics, 77, February, pp. 129-142.

Warne, Robert [1971] "Intermediate Goods in International Trade with Variable Proportions and Two Primary Inputs", Quarterly Journal of Economics, 85, pp. 225-236.

Woodland, A.D. [1977] "Joint Outputs, Intermediate Inputs and International Trade Theory", International Economic Review, 18, 3, October, pp. 517-533.

Table 1

Commodity 1's technology (unit isoquant) is approximated by 7 processes.

	(1)	(2)	(3)	(4)	(5)	(6)	(7)
labor (N)	11	10	9	8	7.25	7	6.5
land (L)	0.25	0.5	1	2	3	4	7
intermediate	1	1	1	1	1	1	1

Commodity 2's technology (unit isoquant) is approximated by 7 processes.

	(1)	(2)	(3)	(4)	(5)	(6)	(7)
labor (N)	10	8	5	4	3	2.5	2
land (L)	2	2.5	4	5	6	7	10
intermediate	1	1	1	1	1	1	1

Commodity 3's (intermediate good) technology (unit isoquant) is approximated by 7 processes.

	(1)	(2)	(3)	(4)	(5)	(6)	(7)
labor (N)	10	7.5	5	3	2	1.5	1
land (L)	4	4.5	5.5	6.5	7.5	8.5	10
intermediate	0	0	0	0	0	0	0

Table 2

$(N^A, L^A, N^B, L^B) = (42,30,40,30)$

P_2		V^W	x_1^A	x_2^A	x_3^A	x_1^B	x_2^B	x_3^B	FP
.9	NT	7.282052	x_{13}=3.692307	0	x_{34}=1.384615 x_{35}=2.307693	x_{13}=3.589744	0	x_{34}=0.51282 x_{35}=3.076923	w=.051282 r=.051282 z=.487179
	T	7.282051	x_{13}=3.893129	0	x_{35}=3.480915	x_{13}=1.485222 x_{14}=1.903700	0	x_{34}=3.801135	w=.051282 r=.051282 z=.487179
.94	NT	7.282052	x_{13}=3.692307	0	x_{34}=1.384615 x_{35}=2.307693	x_{13}=3.589744	0	x_{34}=0.512820 x_{35}=3.076923	w=.051282 r=.051282 z=.487179
	T	7.282051	x_{13}=3.297297	0	x_{34}=4.108109	x_{14}=3.984754	0	x_{34}=1.774083 x_{34}=1.399861	w=.051282 r=.051282 z=.487180
.95	NT	7.284092	x_{13}=3.045454	x_{23}=.681818	x_{34}=3.727271	x_{13}=2.727272	x_{23}=.909091	x_{34}=3.636362	w=.051136 r=.051515 z=.488257
	T	7.284092	x_{13}=2.709664	x_{23}=1.590912	x_{34}=3.219492	x_{13}=3.063063	0	x_{34}=4.144144	w=.051136 r=.051515 z=.488258
.99	NT	7.34772682	x_{13}=3.045454	x_{23}=.681823	x_{34}=3.727272	x_{13}=2.727272	x_{23}=.909091	x_{34}=3.636363	w=.046591 r=.058788 z=.521894
	T	7.347728	x_{13}=3.297297	0	x_{34}=4.108108	x_{13}=2.47543	x_{23}=1.590911	x_{34}=3.255528	w=.046591 r=.058788 z=.521894
1.0	NT	7.363636	x_{13}=3.045454	x_{23}=.681823	x_{34}=3.727272	x_{13}=2.727272	x_{23}=.909095	x_{34}=3.636363	w=.045455 r=.060606 z=.530303
	T	7.363635	x_{13}=2.709664	x_{23}=1.590908	x_{34}=3.219493	x_{13}=3.063063	0	x_{34}=4.144144	w=.045455 r=.060606 z=.530303
1.05	NT	7.443181	x_{13}=3.045454	x_{23}=.681823	x_{34}=3.727272	x_{13}=2.727272	x_{23}=.909095	x_{34}=3.636363	w=.039773 r=.069697 z=.572348
	T	7.443180	x_{13}=2.709664	x_{23}=1.590910	x_{34}=3.219493	x_{13}=3.063063	0	x_{34}=4.144144	w=.039773 r=.069697 z=.572348
1.09	NT	7.592412	0	x_{22}=3.517242	x_{33}=1.655168 x_{34}=1.862071	0	x_{22}=3.448277	x_{33}=1.034478 x_{34}=2.413795	w=.037586 r=.075172 z=.601379
	T	7.592408	0	x_{22}=4.112359	x_{34}=3.03371	0	x_{22}=2.85316	x_{33}=2.68965 x_{34}=1.242154	w=.037586 r=.075172 z=.601379

Table 2 (continued)

1.1	NT	7.662066	0	$x_{22}=3.517241$	$x_{33}=1.65517$ $x_{34}=1.862070$	0 0	$x_{22}=3.448277$	$x_{33}=1.034481$ $x_{34}=2.413794$	w=.037931 r=.075862 z=.606896
	T	7.662066	0	$x_{22}=3.573435$ $x_{23}=1.169860$	$x_{34}=2.521071$	0	$x_{22}=2.222221$	$x_{33}=4.44444$	w=.037931 r=.075862 z=.606896

Table 3

$(N^A, L^A, N^B, L^B) = (40,30,40,30)$

P_2		V^W	x_1^A	x_2^A	x_3^A	x_1^B	x_2^B	x_3^B	FP
.9	NT	7.179487	x_{13}=3.58974	0	x_{34}=0.51282 x_{35}=3.07692	x_{13}=3.58974	0	x_{34}=0.51282 x_{35}=3.07692	w=.051282 r=.051282 z=.487179
	T	7.179485	x_{13}=0.997925 x_{14}=3.118498	0	x_{35}=3.035344	x_{13}=3.063063	0	x_{34}=4.144144	w=.051282 r=.051282 z=.487180
.95	NT	7.1818209	x_{13}=2.727272	x_{23}=.909095	x_{34}=3.636363	x_{13}=2.727272	x_{23}=.909095	x_{34}=3.636363	w=.051136 r=.051515 z=.488257
	T	7.181819	x_{13}=2.391482	x_{23}=1.818182	x_{34}=3.12858	x_{13}=3.063063	0	x_{34}=4.144144	w=.051136 r=.051515 z=.488257
.99	NT	7.254545	x_{13}=2.727272	x_{23}=.909095	x_{34}=3.636363	x_{13}=2.727272	x_{23}=.909095	x_{34}=3.636363	w=.046591 r=.058788 z=.521894
	T	7.254545	x_{13}=3.063063	0	x_{34}=4.144144	x_{13}=2.39148	x_{23}=1.818182	x_{34}=3.12858	w=.046591 r=.058788 z=.521894
1.0	NT	7.272727	x_{13}=2.72727	x_{23}=.909095	x_{34}=3.636363	x_{13}=2.727272	x_{23}=.909095	x_{34}=3.63636	w=.045455 r=.060606 z=.530303
	T	7.272728	x_{13}=2.39148	x_{23}=1.818186	x_{34}=3.12858	x_{13}=3.063063	0	x_{34}=4.144144	w=.045455 r=.060606 z=.530303
1.01	NT	7.290912	x_{13}=2.72727	x_{23}=.909095	x_{34}=3.636363	x_{13}=2.727272	x_{23}=.909095	x_{34}=3.636363	w=.044318 r=.062424 z=.538711
	T	7.290910	x_{13}=2.391481	x_{23}=1.818186	x_{34}=3.128582	x_{13}=3.063063	0	x_{34}=4.144144	w=.044318 r=.062424 z=.538711
1.05	NT	7.363635	x_{13}=2.72727	x_{23}=.909095	x_{34}=3.636363	x_{13}=2.72727	x_{23}=.909095	x_{34}=3.63636	w=.039773 r=.069697 z=.572348
	T	7.363635	x_{13}=2.391482	x_{23}=1.818182	x_{34}=3.128583	x_{13}=3.063063	0	x_{34}=4.144144	w=.039773 r=.069697 z=.572348
1.1	NT	7.586205	0	x_{22}=3.44828	x_{33}=1.034488 x_{34}=2.41379	0	x_{22}=3.448277	x_{33}=1.03448 x_{34}=2.41379	w=.037931 r=.075862 z=.037931
	T	7.586204	0	x_{22}=3.090676 x_{23}=1.583653	x_{34}=2.452106	0	x_{22}=2.222221	x_{34}=4.44444	w=.037931 r=.075862 z=.606896

Table 4

$(N^A, L^A, N^B, L^B) = (47,10,35,50)$

P_2		vw	x_1^A	x_2^A	x_3^A	x_1^B	x_2^B	x_3^B	FP	
	NT	6.660722	$x_{11}=2.295858$	0	$x_{31}=1.81065$ $x_{32}=.485209$	0	$x_{23}=4.59459$	$x_{32}=2.837840$ $x_{35}=1.756755$	$w^A=.023669$ $r^A=.118343$ $z^A=.710059$	$w^B=.051351$ $r^B=.051351$ $z^B=.487888$
.95	T	7.28409	$x_{13}=4.451612$	$x_{23}=1.387099$	0	$x_{13}=1.321114$	$x_{23}=.203818$	$x_{34}=7.363636$	$w=.051282$ $r=.051282$ $z=.487179$	
	NT	6.844508	$x_{11}=2.29586$	0	$x_{31}=1.81065$ $x_{32}=0.485209$	0	$x_{23}=4.594596$	$x_{34}=2.83784$ $x_{35}=1.75676$	$w^A=.023669$ $r^A=.118343$ $z^A=.710059$	$w^B=.053513$ $r^B=.053514$ $z^B=.508379$
.99	T	7.347728	$x_{13}=4.451612$	$x_{23}=1.387099$	0	$x_{13}=1.321114$	$x_{23}=0.203812$	$x_{34}=7.36364$	$w=.046591$ $r=.058788$ $z=.521894$	
	NT	7.349909	$x_{11}=2.29586$	0	$x_{31}=1.810653$ $x_{32}=0.485206$	0	$x_{23}=4.594594$	$x_{34}=2.837838$ $x_{35}=1.756756$	$w^A=.023669$ $r^A=.118343$ $z^A=.710059$	$w^B=.059460$ $r^B=.059459$ $z^B=.564864$
1.1	T	7.618962	$x_{12}=1.785712$	$x_{22}=3.64286$	0	0	$x_{22}=1.660098$	$x_{33}=.226605$ $x_{34}=6.86207$	$w^A=.035058$ $r^A=.085057$	$w^B=.037931$ $r^B=.075862$ $z=.606896$

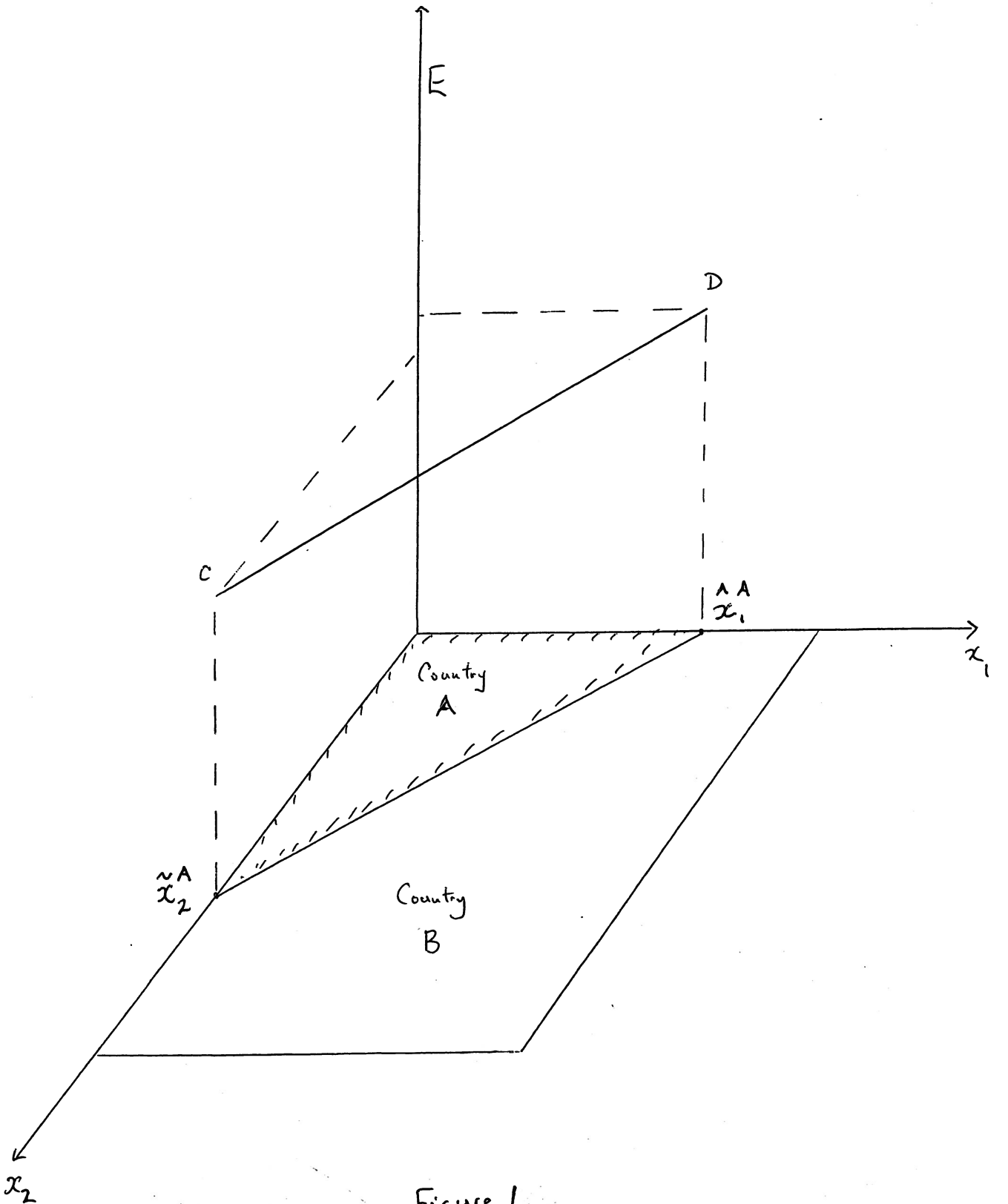

Figure 1

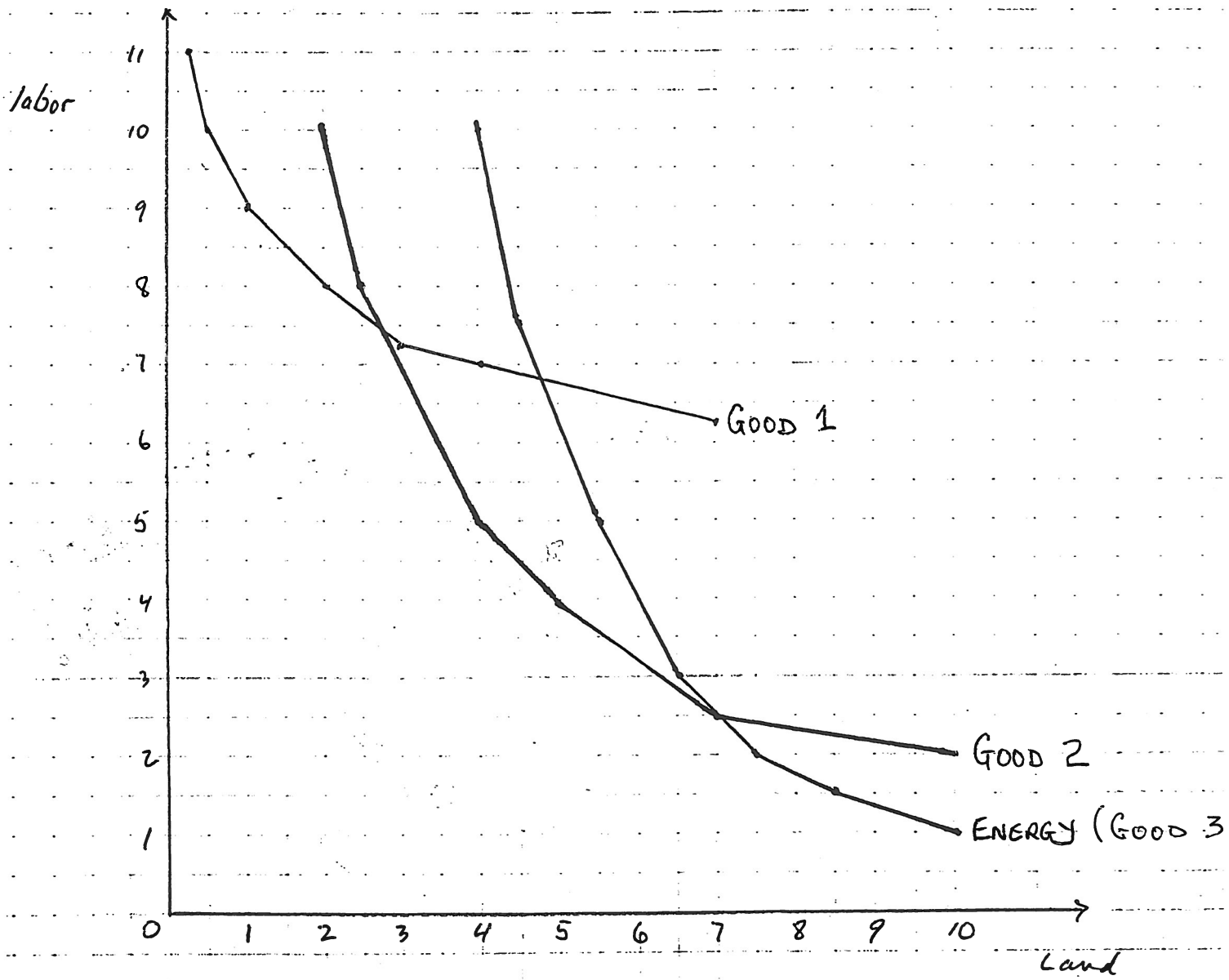
labor
11
10
9
8
7
6
5
4
3
2
1
0
1
2
3
4
5
6
7
8
9
10
Land
GOOD 1
GOOD 2
ENERGY (GOOD 3

Figure 2

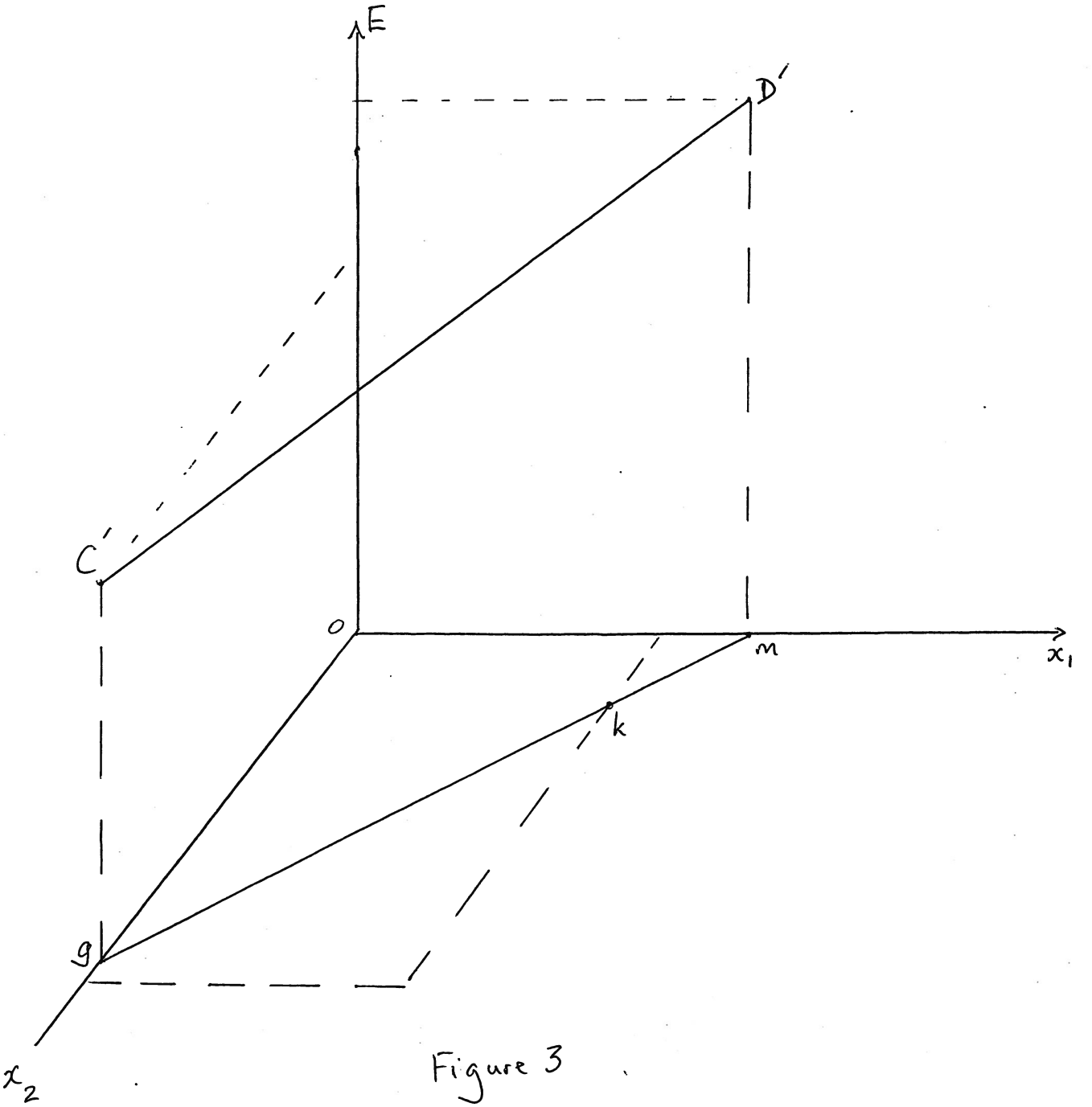

Figure 3

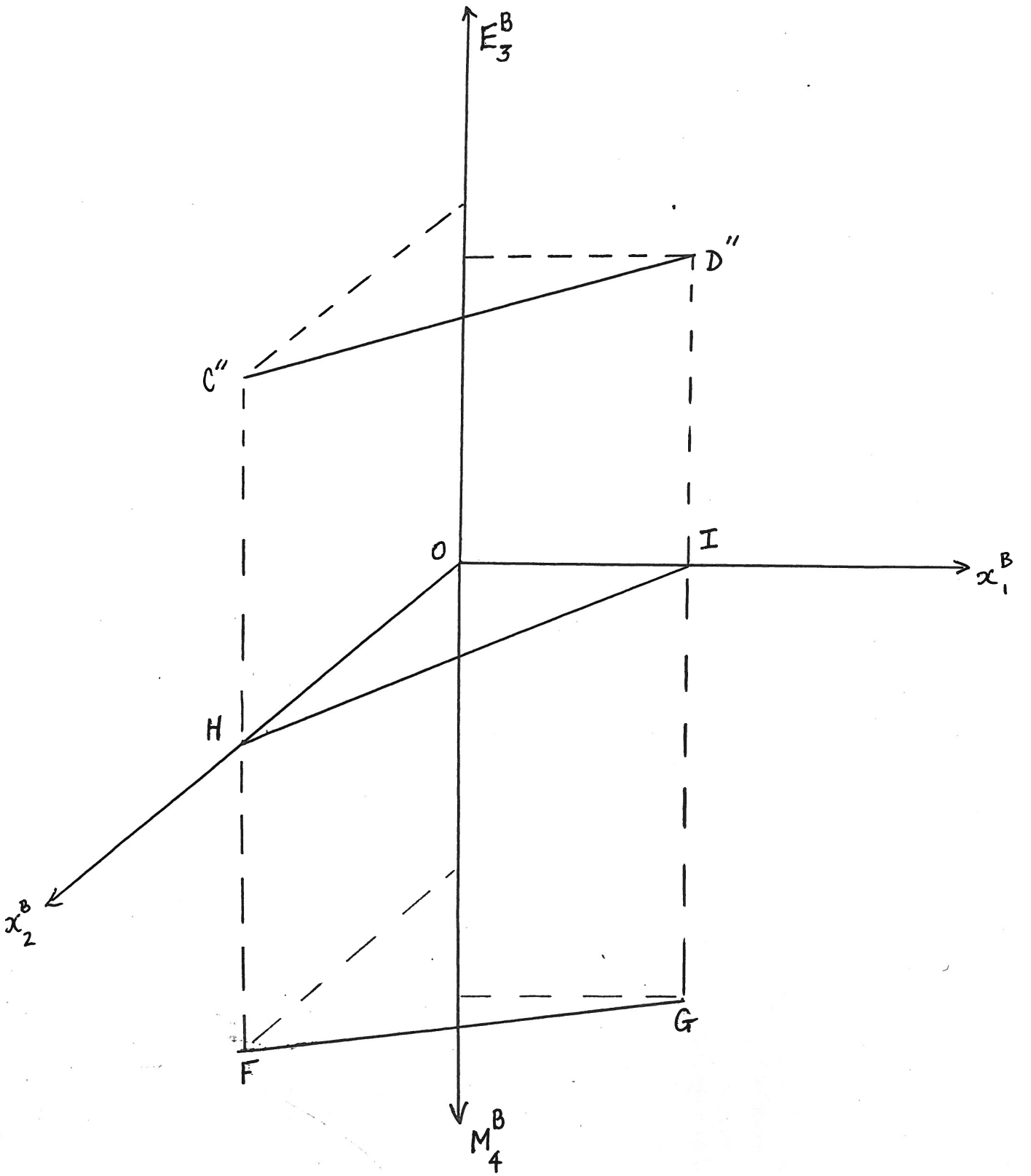

Figure 4

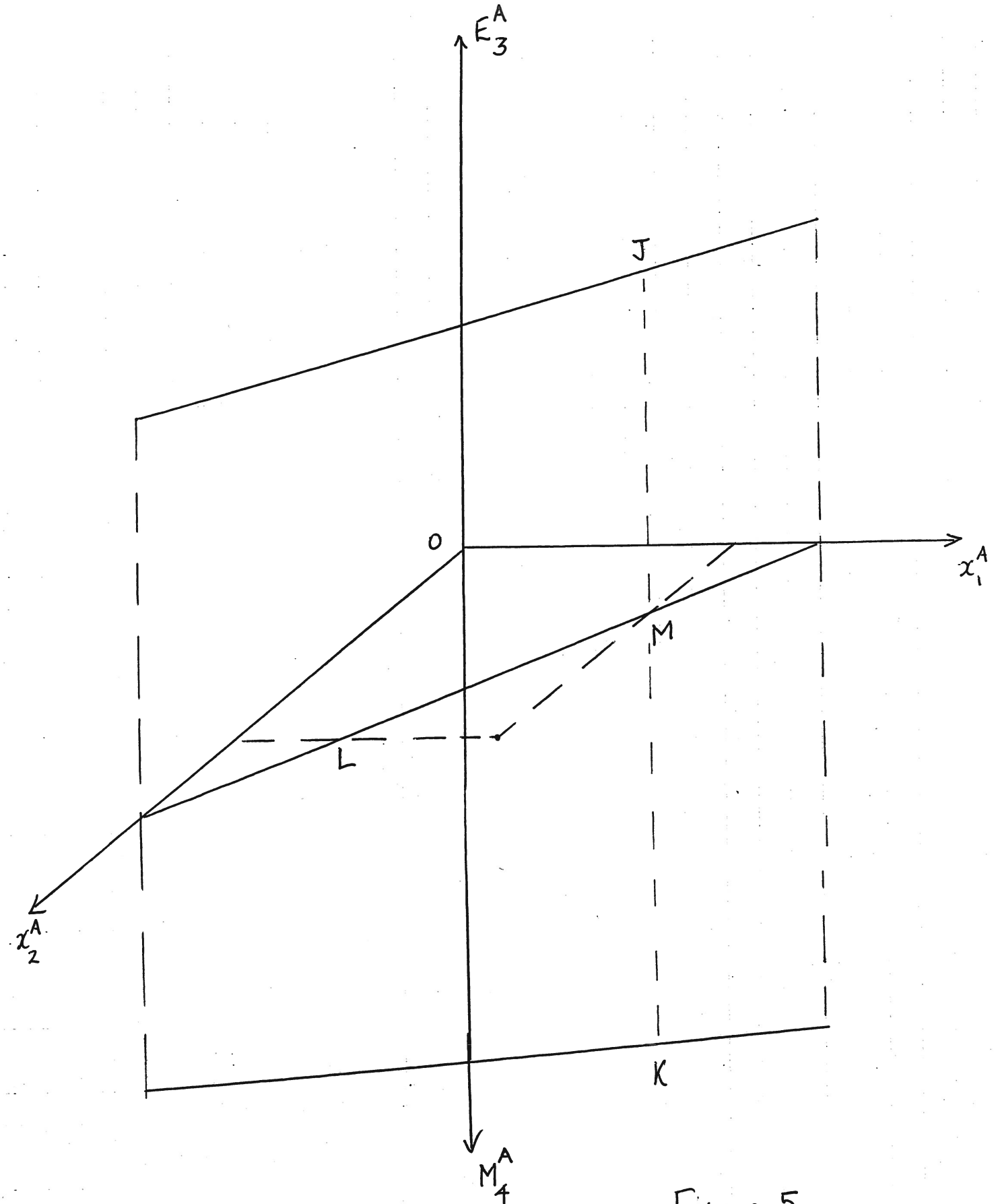

Figure 5