ECONSTOR
Make Your Publications Visible.

A Service of
ZBW
Leibniz-Informationszentrum Wirtschaft
Leibniz Information Centre for Economics

Aslam, Shoaib; Amin, Shahid

**Article**

# Impact of intellectual capital on financial vulnerability of pharmaceuticals sector in Pakistan

Pakistan Journal of Commerce and Social Sciences (PJCSS)

**Provided in Cooperation with:**
Johar Education Society, Pakistan (JESPK)

*Suggested Citation:* Aslam, Shoaib; Amin, Shahid (2015) : Impact of intellectual capital on financial vulnerability of pharmaceuticals sector in Pakistan, Pakistan Journal of Commerce and Social Sciences (PJCSS), ISSN 2309-8619, Johar Education Society, Pakistan (JESPK), Lahore, Vol. 9, Iss. 1, pp. 171-184

This Version is available at:
https://hdl.handle.net/10419/188188

**Standard-Nutzungsbedingungen:**

Die Dokumente auf EconStor dürfen zu eigenen wissenschaftlichen Zwecken und zum Privatgebrauch gespeichert und kopiert werden.

Sie dürfen die Dokumente nicht für öffentliche oder kommerzielle Zwecke vervielfältigen, öffentlich ausstellen, öffentlich zugänglich machen, vertreiben oder anderweitig nutzen.

Sofern die Verfasser die Dokumente unter Open-Content-Lizenzen (insbesondere CC-Lizenzen) zur Verfügung gestellt haben sollten, gelten abweichend von diesen Nutzungsbedingungen die in der dort genannten Lizenz gewährten Nutzungsrechte.

**Terms of use:**

*Documents in EconStor may be saved and copied for your personal and scholarly purposes.*

*You are not to copy documents for public or commercial purposes, to exhibit the documents publicly, to make them publicly available on the internet, or to distribute or otherwise use the documents in public.*

*If the documents have been made available under an Open Content Licence (especially Creative Commons Licences), you may exercise further usage rights as specified in the indicated licence.*

https://creativecommons.org/licenses/by-nc/4.0/

WWW.ECONSTOR.EU

Mitglied der Leibniz-Gemeinschaft

**Pak J Commer Soc Sci**
Pakistan Journal of Commerce and Social Sciences
2015, Vol. 9 (1), 171-184

# Impact of Intellectual Capital on Financial Vulnerability of Pharmaceuticals Sector in Pakistan

Shoaib Aslam
Department of Commerce, The Islamia University of Bahawalpur, Pakistan
Email: shoaibiub@gmail.com

Shahid Amin
Department of Commerce, The Islamia University of Bahawalpur, Pakistan
Email: shahid.ameen2@gmail.com

**Abstract**

Generally, Intellectual capital (IC) is recognized as a strategic asset of a company and used for value creation to sustain the competitive advantage. Value can be created by intangibles that are not always depicted in annual reports but are helpful to face financial shocks. The purpose of this study is to identify the impact of IC on financial vulnerability (FV) of pharmaceutical sector in Pakistan. Quantitative data collected from the annual reports of listed pharmaceutical sector in Pakistan to test the study empirically. Data is examined by using PLS-Graph version 3. IC efficiency is measured through value added intellectual coefficient (VAIC) model developed by Pulic (2000, 2004). FV is measured by using the vulnerability model introduced by Tuckman and Chang (1991). Results show consistency with expectations moreover, IC efficiency of pharmaceutical firms has significant impact on FV. This study extends the literature of FV with the combination of IC.

**Keywords:** intellectual capital, financial vulnerability, structural equation modeling, partial least square, pharmaceutical sector.

## 1. Introduction

Global economy challenges lead to increase the value of knowledge base resources are the key indicators in sustaining competitive edge of the firm. The growth of business can be measured by efficiency and novelty supported by valuable management of both real and invisible assets knowingly as IC (Xinyu, 2014). IC considered as essential corporate assets that influence on strategic performance of business. Prediction of FV is increasing which is important to corporate governance (Aziz & Dar, 2006). Moreover, forecasting of financial shocks is not only an interesting academic question but also related to investors and administration who want to invest their money sensibly to keep their firm flourishing.

Pharmaceutical industry is well managed in its use of human involvement and technology which is mainly dependent on its IC (Sharabati et al., 2010). This industry is important for developing countries because it plays significant contribution to GDP by reducing the import drugs burden from outside the country. Due to its rapid growth, innovation and significant contribution to GDP, it is considered as much focused industry for the researchers and academicians. Pakistani pharmaceutical industry meets almost 70%

demand of its own country, and shows 67% revenue increase over the last five years. Further it is also considered a knowledge intensive industry that contains formulas, patents, intellectual property rights, etc.

Improper assessment techniques may put stakeholders at financial risk when making long term planning. Now-a-days most of the organizations estimate their financial position by scrutinizing deviation of budgeted expenses which wasted time and effort of management (Bukhori et al., 2013).

Pharmaceutical sector is viewed having different kinds of risks such as business risk and economic risk. Early cautions of financial failure are more considerable for top management and regulatory body as well. However, FV is important in pharmaceutical due to the rapid growth of pharmaceutical industry in Pakistan over the time. Pharmaceutical industry has considerable impact on employment by providing the large number of highly skilled people involved; the vulnerability of pharmaceutical has extensive effect on both employment and career development of employees and for the supply of life saving drugs to the general public.

Present study explores the impact of IC on FV which indicates how much a firm financially strong, while acknowledging the IC. This study is unique because it explores first time FV through the googles of IC components in pharmaceutical sector of Pakistan. This study is an initial report which intends to make a bridge between IC and traditional measures of financial failure.

## 2. Literature Review

No consensus has been developed about IC definition (Bhartesh & Bandyopadhyay, 2005). IC is something that can't be visible but having great contribution towards financial value (Edvinsson & Malone, 1997). As IC defined by above given experts "the sum of knowledge a company is able to use in process of conducting business to create value – a value added for the company." The IC given by the Pulic (2000, 2004) has been reflected throughout the research, analyzing as incorporating of human capital (HC), structural capital (SC) and capital employed (CE). HC is the expertise, education, experiences, talent and capabilities of employees and the reality is that firms can't possess or stop those employees as of going back to home at off times; SC refers to the knowledge that holds a firm after the employees go home at night and it consists of manufacturing processes, relationships with customers, business procedures, copy rights, policies etc. (Zéghal & Maaloul, 2010). CE is integral part of IC taking into account enhanced usage of real assets is possible with effective use of HC and SC (Makki & Lodhi, 2014; Makki & Lodhi, 2009). However, several researchers highlighted that CE is not considered as strategic in nature as its comprises common sources (Riahi-Belkaoui, 2003; Youndt et al., 2004).

According to resource based theory, internal resources are more important than external to achieve the competitive advantage. This particular theory focusing that a firm achieves competitive advantage and extra ordinary financial performance by efficient utilization of strategic resources (Zéghal & Maaloul, 2010). The HC theory proposes that investment on employees will produce maximum financial return. However, in evaluating the contribution of HC in financial performance it is important to differentiate between general and specific HC with context of pre and post human investment activities(Karimi,

2014). Human capital theory is also associated with resource based theory as the HC cannot be imitated, substituted by its competitors.

FV is likely to decrease products or services by facing financial shocks, if it continues, it will consequently affect the strategic existence of the firm (Mwenja & Lewis, 2009;Trussel, 2002; Tuckman & Chang, 1991). Financial shocks mean the observation of going concern as prospect of financial indicator that company has not more ability to continue its business due to failure of its operation as consequences of loss. Firms that suffering loss from its operations for consecutive three years be considered as financial vulnerable (Gilbert et al., 1990), alternatively financial failures exists due to lack of information regarding the causes of financial failure (Tuckman & Chang, 1991).

FV with few sources of revenue leads to incapability to survive in financial shock (Tuckman & Chang, 1991).Revenue diversification has become practice in almost all organizations because it minimizes business risk. According to portfolio theory multiple revenue sources diversify the risk and it supports to a business in financial crises. Revenue generation through multiple sources a firm can decrease its financial threats and such strategy leads to business stability.

The prior studies link IC with the financial performance and corporate governance in different sectors such as financial sector (Huang, Hsu, & Cheng, 2010; Mondal & Ghosh, 2012) , textile and information technology (Pal & Soriya, 2011, 2012). On the other hand FV is solely assessed in nonprofit organizations but nobody examine FV under the conception of IC. Present study assesses the impact of IC on FV by using Pulic (2000, 2004) model of IC and Tuckman and Chang (1991) FV model. In this regard, following hypotheses are developed to assess the relationship:

- **$H_0$**: IC has no impact on FV
- **$H_1$:** IC has significant impact on FV

## 3. Methodology

The objective of this study is to examine the impact of IC on FV of pharmaceutical sector in Pakistan. Pharmaceutical firms listed in Karachi Stock Exchange (KSE) were select to explore the topic. The entire population was chosen to examine the study therefore contrasting any requirement for sampling. The data have been collected by using secondary sources. The major data is collected form published audited annual reports of listed pharmaceutical firms. The study used five years data from 2009 to 2013; the reason is that the data for the study was accessible only for these years. The annual reports are collected from the companies websites, the head offices of the companies, annual reports data base of KSE and different other electronic data bases.

### *3.1 Intellectual Capital Measurement*

The VAIC methodology developed by Ante Pulic (2000, 2004) in order to measure the IC ability of a firm is being used for measuring the independent variables. Efficiency of tangible and intangible assets can be estimated which is based on audited published financial data of firms. VAIC is an investigative method intended to permit shareholders, administration and different stakeholders to viably screen and assess the efficiency of

value addition by an organization's total resources and each major resource component (Firer & Williams, 2003; Ghosh & Mondal, 2009). Value Added (VA) is the most suitable indicator for business success which is the difference of output and input.

$$VA = OUT - IN$$

Where: VA = Value Added, OUT = Total Sales, IN = Cost of purchase materials, components and services.

VA is the sum of operating profit (OP), employees benefit (EC), depreciation (D) and amortization (A).

$$VA = OP + EC + D + A$$

IC has two components, such as HC and SC. Human Capital Efficiency (HCE) is the ratio of VA and HC. SC is the second component of IC, which is the difference of VA and HC. Structural Capital Efficiency (SCE) is the ratio of SC and VA.

Intellectual Capital Efficiency (ICE) is the combination of HC efficiency and SC efficiency:

$$ICE = HCE + SCE$$

IC can't create value on its own; therefore, it needs information of the efficiency of CE Pulic (2004) which is the ratio of VA and CE.

For the assessment of overall valued creation efficiency all three efficiency indicators are added.

$$VAIC = ICE + CEE$$

These summative indicators permit us to comprehend the overall efficiency of firm and designate its intellectual ability. In short VAIC estimates how much new value has been formed per invested monetary unit in each resource (Pulic, 2004). Higher coefficient shows higher value creation by utilizing the resources of a firm including IC.

*3.2 Financial Vulnerability Model*

This study adopts the FV model developed by Tuckman and Chang in 1991. Less financial elastic firms are tend to experience more financially vulnerable and incompetent to withstand financial shocks (Tuckman & Chang, 1991). Financial shocks mean unpredicted loss in income. Tuckman and Chang (1991) developed four indicators to calculate the FV. These indicators are as follows:

3.2.1 Equity Ratio

A firm with higher equity balance may be able to leverage its assets and has a strong position to face unpredictable financial shocks. On the other hand, lower equity balance means a firm is more financial vulnerable. Equity ratio is calculated by dividing total equity to total revenue.

ER = Total Equity/Total Revenue

Where: ER = Equity Ratio

3.2.2 Revenue Concentration Ratio

Firms generating revenue from various sources are less vulnerable during financial shocks. Revenue concentration ratio can be calculated by using Herfindahl Index by adding up the squared percentage of each revenue source.

$$\text{RCR} = \sum \left( \frac{\text{Revenue Source } i}{\text{Total Revenue}} \right)^2$$

Where: RCR = Revenue Concentration Ratio

3.2.3 Administrative Cost Ratio

Firms with few admin cost may be more vulnerable in financial shocks in comparison of those which have more admin cost. After a financial shock, a firm which has higher admin cost may be able to reduce discretionary admin cost. Administrative cost ratio is calculated as

$$\text{ACR} = \frac{\text{Administrative Expenses}}{\text{Total Revenue}}$$

Where: ACR = Administrative Cost Ratio

3.2.4 Low or Negative Operating Margin

Firms with low operating margin may be more vulnerable to financial shocks as compared to those which have high operating margin. On occurrence of financial shock a firm which has high operating margin may be able to work with reduced operating margin rather than cutting a segment or product.

$$\text{OM} = \frac{\text{Total Revenue} - \text{Total Expenses}}{\text{Total Revenue}}$$

Where: OM = Operating Margin

The strength of this model is that it is simple to understand and based on published financial data of firms.

*3.3 Developing the Structural Equations*

Research model is developed by spawning structural equations that link IC efficiency and FV.

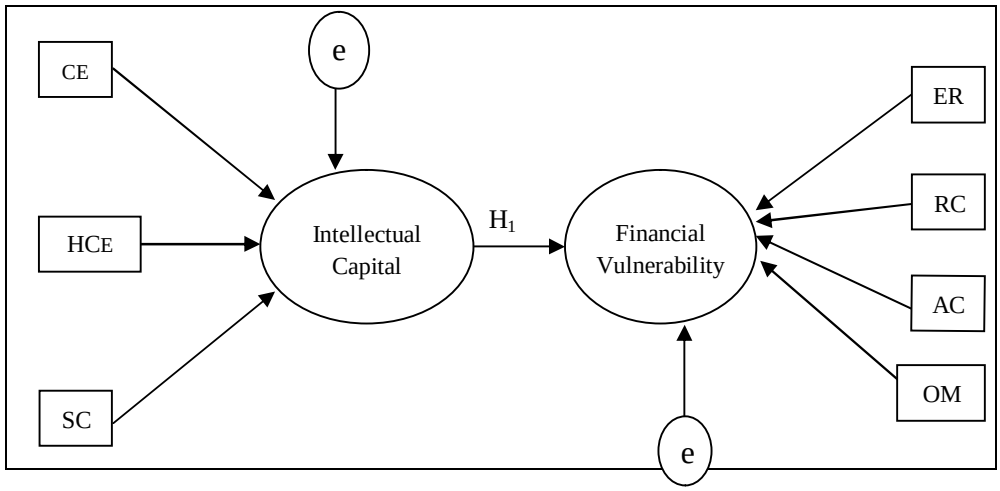


**Figure 1: Structural Connections between IC and FV**

In Figure 1 all indicators build and influence their respective latent constructs. These constructs can be calculated in mathematical terms as

$$\xi = \gamma \beta_1 X1 + \gamma \beta_2 X2 + \gamma \beta_3 X3 + \zeta$$

$$\eta_0 = \gamma \beta_1 Y1 + \gamma \beta_2 Y2 + \gamma \beta_3 Y3 + \gamma \beta_4 Y4 + \zeta$$

The $H_1$ impact of latent exogenous variable, IC measures ($\xi$) on latent endogenous variables, FV ($\eta_0$) would be measured through

$$\eta_0 = \beta_1 \xi_1 + \zeta$$

Proxy measures for exogenous and endogenous variables are given in the Table 1.

**Table 1: Descriptions of Exogenous and Endogenous Variables and Symbols**

| Sr. No. | Symbol | Abbreviation | Description |
|---|---|---|---|
| 1 | $\xi$ | IC | Latent Exogenous Variable, IC Measures |
| 2 | $\eta_0$ | FP | Latent endogenous |
| 3 | $\zeta$ | E | Random disturbance term |
| 4 | $\gamma_x 1$ | CEE | Path Coefficient of $X_1$, Capital Employed Efficiency |
| 5 | $\gamma_x 2$ | HCE | Path Coefficient of $X_2$, Human Capital Efficiency |

| | | | |
|---|---|---|---|
| 6 | $\gamma_x 3$ | SCE | Path Coefficient of $X_3$, Structural Capital Efficiency |
| 7 | $\gamma_y 1$ | ER | Path Coefficient of $Y_1$, Equity Ratio |
| 8 | $\gamma_y 2$ | RCR | Path Coefficient of $Y_2$, Revenue Concentration Ratio |
| 9 | $\gamma_y 3$ | ACR | Path Coefficient of $Y_3$, Administrative Cost Ratio |
| 10 | $\gamma_y 4$ | OM | Path Coefficient of $Y_4$, Operating Margin |

Figure 2 shows final structural model measuring the impact of IC efficiency on FV. IC efficiency of firms measured by VAIC (Pulic, 1998, 2000), whereas FV is assessed by using Tuckman and Chang vulnerability model that developed in 1991.

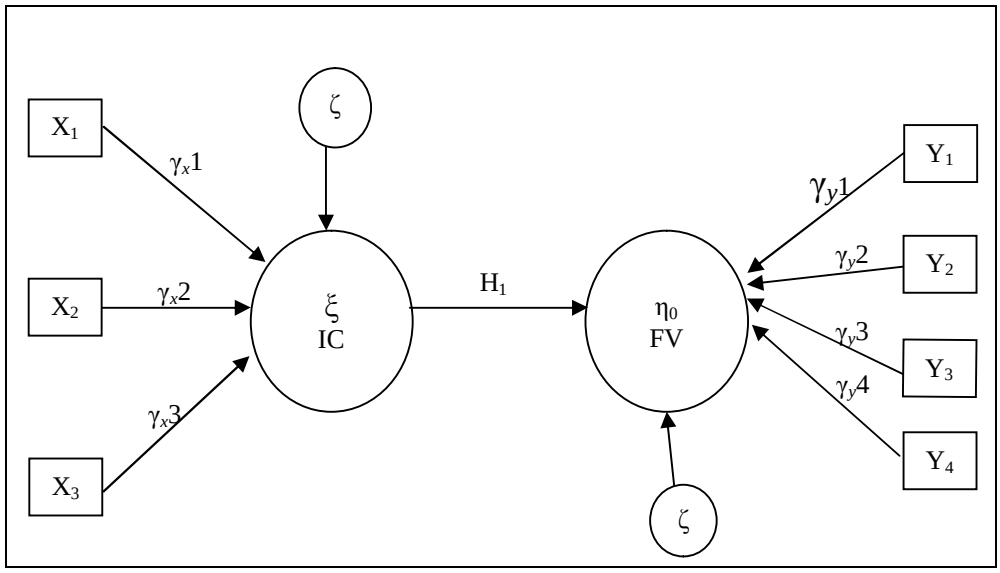


**Figure 2: Impact of IC Efficiency and Firm Financial Performance**

## 4. Results and Discussions

PLS graph v.3.00 was applied to examine the conceptual model and relationship among endogenous and exogenous variables (Chin, 1998, 2001; Gustafsson & Johnson, 2004). Partial Least Square (PLS) is a second generation most powerful structural equation modeling (SEM) technique used to measure both structural and measurement model simultaneously (Makki & Lodhi, 2013) and normally applied on small data sets. It functions admirably with structural equation models that include latent indicators and a series of cause and effect relationships (Gustafsson & Johnson, 2004). PLS has some advantages over other SEM approaches that make it appropriate for this study. Firstly,

PLS constructs can be measured by a single indicator while in other approaches at least four indicators are required for a single construct. Secondly, it does not require normal distribution of data and handles non normal distributed data in a good way(Gefen et al.,2000). Thirdly, PLS represents measurement error and provides more accurate estimates (Bontis et al., 2007).

PLS is a variance based on analytical approach and used frequently in the field of management studies including IC(Bontis, 2001; Sällebrant et al., 2007).The output of PLS graph is interpreted in two stages: The first stage is to assess the measurement model (the relationships between the indicators and constructs), that assess validity and reliability of indicators and their respective constructs; the second stage is to evaluate the structural model (assess the explanatory power of exogenous variables and investigate the significance of path coefficients) (Barclay et al., 1995; Hulland, 1999).

**Table 2: Indicators Validity and Reliability Test**

| Construct Name | Code | VIF | Item Weight | t-value |
|---|---|---|---|---|
| **Intellectual Capital** | CEE | 1.168 | -0.2032 | 1.9347** |
| | HCE | 9.499 | 0.4775 | 12.8713*** |
| | SEC | 9.187 | 0.4903 | 13.2937*** |
| **Financial Vulnerability** | ER | - | 0.3691 | 5.2899*** |
| | RCR | - | -0.3049 | 5.5131*** |
| | ACR | - | -0.0879 | 0.7138 |
| | OM | - | 0.5422 | 6.5503*** |

Significance:*10%, **5%, ***1%

Different statistical tools were adopted to confirm the validity and reliability of measurement model. Validity of formative constructs is determined on the basis of indicators weight that shows the degree to which each indicator contributes for the development of related construct and calculated by using bootstrapping techniques in PLS (Chin, 2010; Saad, 2011). The weights coupled with t-values gave the confirmation of construct validity (Petter et al.,2007) and degree (significant or not) to which each indicator explain the variance in formative construct (Roberts & Thatcher, 2009).

Table 2 shows weights, t-values and respective significance level of each formative constructs (IC and FV). All indicators of IC construct are significant. HCE (0.4775, P<0.01) and SCE (0.4903, P<0.01) are significant at 1% level of significance, whereas, CEE (-0.2032, P<0.05) significant at 5% level of significance. It indicates HC and SC that show greater contribution in the formation of IC construct. Equity ratio (0.3691, P<0.01), revenue concentration ratio (-0.3049, P<0.01) and operating margin (0.5422,

P<0.01), indicators of FV construct are significant indicators at 1% level of significance. Whereas, the administrative cost ratio is not significant at any level.

There is a contradictory view about retaining or eliminating the non-significant indicators. It is better to eliminate all non-significant indicators to achieve all significant paths (Diamantopoulos & Winklhofer, 2001), on the other hand some other researchers suggested to retain non-significant indicators to protect content validity (Bollen & Lennox, 1991; Cohen, et al., 1990; Roberts & Thatcher, 2009). In this study we did not eliminate admin cost ratio because it is part of predicting FV model developed by Tuckman and Chang (1991).

The reliability of formative constructs is assessed with multicollinearity status; unnecessary mulitcollinearity shows instability of the model (Petter et al., 2007). To examine the existence of multicollinearity, variance inflation factor (VIF) test was conducted by using SPSS because VIF is a common way to find out multicollinearity. Indicators having VIF greater than 10 should be eliminated from the construct because VIF less than 10 does not create the problem of multicollinearity (Kleinbaum et al., 1988; Mayer, 1990). Table 2 shows the VIF values of independent variables, all the values remains below from threshold level i.e. 10, it indicates that no multicollinearity problem exists and it confirms the reliability.

To test the structural model we calculate path coefficients (β) which are interpreted as standardized beta weights, R-Squares ($R^2$) which show the explanatory power of the model and $Q^2$ which is the predictive power of the model.

Path coefficients show the association among the exogenous and endogenous variables. To establish meaningful relationship path coefficients should be around 0.2 and ideally above 0.3 (Chin, 2010). The significance of path coefficients is examined by calculating t-value using bootstrapping technique in PLS Graph v.3.0. Table 3 shows the beta coefficients (β), t-value and significance level. The calculated beta coefficients (0.771, 15.4301, p<0.01) are highly significant at 1%. The observed value of β (0.771) is higher than 0.3 so there is a strong relationship among the IC and FV.

**Table 3: Path Coefficients**

| Path | Beta Coefficient | t-value | Significance |
|---|---|---|---|
| **IC and FV** | 0.7710 | 15.4301*** | p<0.01 |

Significance:*10%, **5%, ***1%

$R^2$ value of the endogenous construct is a measure used to find out predictive power of the model. It shows to what extent the exogenous construct explains the endogenous construct. It is suggested that the value of $R^2$ for the explanation of endogenous construct should be greater than 0.10 (Falk & Miller, 1992) and for managerial decision making it should be 0.20 or above (Bontis & Serenko, 2009). In this study the calculated value of $R^2$ (0.595) can be considered satisfactory percentage of variance in the endogenous construct, explained by the exogenous construct taking into account the rules of Falk and

Miller (1992) and Bontis and Serenko (2009). Therefore, IC construct explained FV construct in better way.

**Table 4: R-Square and Q-Square**

| **Path** | **$R^2$** | **$Q^2$** |
|---|---|---|
| **IC and FV** | 0.595 | 0.2832 |

Besides looking at the magnitude of $R^2$ as a measure for predictive relevance we can apply Stone Geisser test of predictive relevance ($Q^2$). This test can be used for additional assessment of model fit in PLS analysis (Geisser, 1975; Stone, 1974).Chin (1998) suggested that $Q^2$ greater than zero shows that the model has predictive relevance, on the other hand $Q^2$ less than zero shows that model not have predictive relevance. It is calculated by using blindfolding and jackknife procedure in PLS Graph. The calculated value of $Q^2$ (0.2832) is greater than zero which implies that the model has predictive relevance.

Therefore, we accept alternative hypothesis that IC has significant impact on FV of pharmaceutical firms in Pakistan. At the end we conclude that if a firm has greater IC efficiency, it has greater potential to face financial shocks and sustain its growth and market share and less risk to go for bankruptcy.

**5. Conclusion**

IC has been recognized as a priceless resource for the pharmaceutical firms. Financial strength of firms depends upon how organization assesses its knowledgeable resources IC which leads to obtain and sustain competitive advantage. However, bankruptcy is viewed as a strategic financial distress of any organization. Accounting information is used to assess the current as well as the future performance of an organization. It is concluded that if the pharmaceutical firms are enriched in IC then it means the firm has greater ability to face financial shock and less vulnerable.

The objective of this study is to explore the impact of IC on FV of pharmaceutical sector in Pakistan for the period of 2009 to 2013. PLS graph is used to examine the structural and measurement model of the study. IC is measured by using Pulic IC model (2000, 2004) and FV is assessed by Tuckman and Chang model developed in 1991. The results show that IC has significant impact on FV in pharmaceutical sector of Pakistan.

This study is useful for the policy makers, managers to realize the value of intangible assets, and use these intangibles to create company's superior value and get the financial stability. Present study enhances the knowledge of academicians, investors and managers about the importance and usefulness of IC. Now the regulators and decision makers need to wake up for effective and efficient utilization of IC to reduce FV.

This study has some limitations. Firstly, this study only assessed FV on the basis of four financial ratios, whereas there are several other ratios and non-financial indicators available to measure the FV. Secondly, it covers only pharmaceutical sector of Pakistan so it cannot be generalized on all Pakistani industries as well as pharmaceutical sector of other countries. Thirdly, it is based on quantitative data that are available on audited financial statement, whereas qualitative aspects of IC and FV are ignored.

The future research of this study will be the focus on other industries by using large sample at national and international level as well. Corporate Governance also considered predicting the FV. PLS graph software is used for the data analysis of this paper; other advanced software such as STAT may be used for better results. Qualitative aspects of IC and FV should be considered for comprehensive results.

## REFERENCES

Azad, N., & Mohajeri, L. (2002). The Effects of Intellectual Capital on Financial Performance: A Case Study of Petrochemical and Pharmaceutical Firms. *Management Science Letters, 2*(2), 511-516.

Aziz, M. A., & Dar, H. A. (2006). Predicting Corporate Bankruptcy: Where We Stand? *Corporate Governance, 6*(1), 18-33.

Barclay, D., Higgins, C., & Thompson, R. (1995). The Partial Least Squares (PLS) Approach to Causal Modeling: Personal Computer Adoption and Use as an Illustration. *Technology Studies, 2*(2), 285-309.

Bhartesh, K., & Bandyopadhyay, A. (2005). Intellectual Capital-Concept and Its Measurement. *Finance India, 19*(4), 1365.

Bollen, K., & Lennox, R. (1991). Conventional Wisdom on Measurement: A Structural Equation Perspective. *Psychological Bulletin, 110*(2), 305-314.

Bontis, N. (2001). Assessing Knowledge Assets: A Review of the Models Used to Measure Intellectual Capital. *International Journal of Management Reviews, 3*(1), 41-60.

Bontis, N., Booker, L. D., & Serenko, A. (2007). The Mediating Effect of Organizational Reputation on Customer Loyalty and Service Recommendation in the Banking Industry. *Management Decision, 45*(9), 1426-1445.

Bontis, N., & Serenko, A. (2009). Longitudinal Knowledge Strategising in A Long-Term Healthcare Organisation. *International Journal of Technology Management, 47*(1), 250-271.

Bukhori, M. A. M., Othman, R., Aris, N. A., & Omar, N. (2013). Assessing Financial Vulnerability of Cooperative. *Journal of Energy Technologies and Policy, 3*(11), 374-381.

Chin, W. (1998). The partial least squares approach for structural equation modeling, Marcoulides GA, Modern Methods for Business Research, 1998, 295-336: Lawrence Erlbaum Associates, London.

Chin, W. (2001). PLS Graph User's Guide, Version 3.0, . Houston: Soft Modeling Inc.

Chin, W. W. (2010). How to write up and report PLS analyses *Handbook of partial least squares* (655-690): Springer.

Cohen, P., Cohen, J., Teresi, J., Marchi, M., & Velez, C. N. (1990). Problems in the Measurement of Latent Variables in Structural Equations Causal Models. *Applied Psychological Measurement, 14*(2), 183-196.

Diamantopoulos, A., & Winklhofer, H. M. (2001). Index Construction with Formative Indicators: An Alternative to Scale Development. *Journal of Marketing Research, 38*(2), 269-277.

Edvinsson, L., & Malone, M. S. (1997). *Intellectual Capital: Realizing Your Company's True Value by Finding Its Hidden Brainpower*. New York: HarperCollins.

Falk, R. F., & Miller, N. B. (1992). *A primer for soft modeling*: Ohio: University of Akron Press.

Firer, S., & Williams, S. M. (2003). Intellectual Capital and Traditional Measures of Corporate Performance. *Journal of Intellectual Capital, 4*(3), 348-360.

Gefen, D., Straub, D., & Boudreau, M.-C. (2000). Structural Equation Modeling and Regression: Guidelines for Research Practice. *Communications of the Association for Information Systems, 4*(1), 1-77.

Geisser, S. (1975). The Predictive Sample Reuse Method with Applications. *Journal of the American Statistical Association, 70*(350), 320-328.

Ghosh, S., & Mondal, A. (2009). Indian Software And Pharmaceutical Sector IC And Financial Performance. *Journal of Intellectual Capital, 10*(3), 369-388.

Gilbert, L. R., Menon, K., & Schwartz, K. B. (1990). Predicting Bankruptcy for Firms in Financial Distress. *Journal of Business Finance & Accounting, 17*(1), 161-171.

Gustafsson, A., & Johnson, M. D. (2004). Determining Attribute Importance in a Service Satisfaction Model. *Journal of Service Research, 7*(2), 124-141.

Huang, G.-L., Hsu, H.-L., & Cheng, W.-S. (2010). The Key Factors to the Successful Generation of Intellectual Capital: The Bank Corporate Loans Department Example. *International Journal of Electronic Business Management, 8*(2), 81-95.

Hulland, J. (1999). Use of Partial Least Squares (PLS) In Strategic Management Research: A Review of Four Recent Studies. *Strategic Management Journal, 20*(2), 195-204.

Karimi, J. M. N. K. (2014). *Relationship Between Intellectual Capital Accounting and Business Performance in the Pharmaceutical Firms in Kenya.* Jomo Kenyatta University of Agriculture and Technology, NAIROBI, KENYA.

Kleinbaum, D., Kupper, L., & Muller, K. (1988). Applied regression analysis and other multivariate analysis methods. *Boston: PWS-Kent Publishing Company, MA, USA.*

Komnenic, B., & Pokrajcic, D. (2012). Intellectual Capital and Corporate Performance of Mncs in Serbia. *Journal of Intellectual Capital, 13*(1), 106-119.

Makki, M., & Lodhi, S. A. (2013). Impact of Corporate Governance on Financial Performance. *Pakistan Journal of Social Sciences 33*(2), 265-280.

Makki, M. A. M., & Lodhi, S. A. (2014). Impact of Corporate Governance on Intellectual Capital Efficiency and Financial Performance. *Pakistan Journal of Commerce and Social Sciences, 8*(2), 305-330.

Makki, M. M., & Lodhi, S. A. (2009). Impact of Intellectual Capital on Return on Investment in Pakistani Corporate Sector. *Australian Journal of Basic and Applied Sciences, 3*(3), 2995-3007.

Mayer, C. (1990). Financial systems, corporate finance, and economic development *Asymmetric information, corporate finance, and investment* (307-332): University of Chicago Press.

Mondal, A., & Ghosh, S. K. (2012). Intellectual Capital and Financial Performance of Indian Banks. *Journal of Intellectual Capital, 13*(4), 515-530.

Mwenja, D., & Lewis, A. (2009). Exploring the Impact of the Board of Directors on the Performance of Not-for-Profit Organizations. *Business Strategy Series, 10*(6), 359-365.

Pal, K., & Soriya, S. (2011). Financial Reporting of Intellectual Capital and Company's Performance in Indian Information Technology Industry. *International Journal of Asian Business and Information Management, 2*(2), 34-49.

Pal, K., & Soriya, S. (2012). IC Performance of Indian Pharmaceutical and Textile Industry. *Journal of Intellectual Capital, 13*(1), 120-137.

Petter, S., Straub, D., & Rai, A. (2007). Specifying Formative Constructs in Information Systems Research. *MIS Quarterly*, 623-656.

Pulic, A. (1998). *Measuring the performance of intellectual potential in knowledge economy*. Paper presented at the 2nd McMaster Word Congress on Measuring and Managing Intellectual Capital by the Austrian Team for Intellectual Potential, Hamilton, Canada.

Pulic, A. (2000). VAIC™–an Accounting Tool for IC Management. *International Journal of Technology Management, 20*(5), 702-714.

Pulic, A. (2004). Intellectual Capital–Does it Create or Destroy Value? *Measuring business excellence, 8*(1), 62-68.

Riahi-Belkaoui, A. (2003). Intellectual Capital and Firm Performance of US Multinational Firms: A Study of the Resource-Based and Stakeholder Views. *Journal of Intellectual Capital, 4*(2), 215-226.

Roberts, N., & Thatcher, J. (2009). Conceptualizing and Testing Formative Constructs: Tutorial and Annotated Example. *ACM SIGMIS Database, 40*(3), 9-39.

Saad, N. (2011). *Fairness Perceptions and Compliance Behaviour: Taxpayers' Judgments in Self-Assessment Environments.* University of Canterbury, New Zealand. University of Canterbury Research Repository database.

Sällebrant, T., Hansen, J., Bontis, N., & Hofman-Bang, P. (2007). Managing Risk with Intellectual Capital Statements. *Management Decision, 45*(9), 1470-1483.

Sharabati, A. A. A., Jawad, S. N., & Bontis, N. (2010). Intellectual Capital and Business Performance in the Pharmaceutical Sector of Jordan. *Management Decision, 48*(1), 105-131.

Stone, M. (1974). Cross-Validatory Choice and Assessment of Statistical Predictions. *Journal of the Royal Statistical Society. Series B (Methodological)*, 36(2), 111-147.

Trussel, J. M. (2002). Revisiting the Prediction of Financial Vulnerability. *Nonprofit Management and Leadership, 13*(1), 17-31.

Tuckman, H. P., & Chang, C. F. (1991). A Methodology for Measuring the Financial Vulnerability of Charitable Nonprofit Organizations. *Nonprofit and Voluntary Sector Quarterly, 20*(4), 445-460.

Xinyu, Z. (2014). The Impacts of Intellectual Capital of China's Public Pharmaceutical Company on Company's Performance. *Journal of Chemical and Pharmaceutical Research, 6*(4), 999-1004.

Youndt, M. A., Subramaniam, M., & Snell, S. A. (2004). Intellectual Capital Profiles: An Examination of Investments and Returns. *Journal of Management Studies, 41*(2), 335-361.

Zéghal, D., & Maaloul, A. (2010). Analysing Value Added as an Indicator of Intellectual Capital and its Consequences on Company Performance. *Journal of Intellectual Capital, 11*(1), 39-60.