ECONSTOR
Make Your Publications Visible.

A Service of
ZBW
Leibniz-Informationszentrum Wirtschaft
Leibniz Information Centre for Economics

Rawal, Pankaj; Singh, Deepali

Article

E-tailing quality index

The International Journal of Management Science and Information Technology (IJMSIT)

Provided in Cooperation with:
North American Institute of Science and Information Technology (NAISIT), Toronto

Suggested Citation: Rawal, Pankaj; Singh, Deepali (2016) : E-tailing quality index, The International Journal of Management Science and Information Technology (IJMSIT), ISSN 1923-0273, NAISIT Publishers, Toronto, Iss. 20, pp. 19-39

This Version is available at:
https://hdl.handle.net/10419/178823

Standard-Nutzungsbedingungen:

Die Dokumente auf EconStor dürfen zu eigenen wissenschaftlichen Zwecken und zum Privatgebrauch gespeichert und kopiert werden.

Sie dürfen die Dokumente nicht für öffentliche oder kommerzielle Zwecke vervielfältigen, öffentlich ausstellen, öffentlich zugänglich machen, vertreiben oder anderweitig nutzen.

Sofern die Verfasser die Dokumente unter Open-Content-Lizenzen (insbesondere CC-Lizenzen) zur Verfügung gestellt haben sollten, gelten abweichend von diesen Nutzungsbedingungen die in der dort genannten Lizenz gewährten Nutzungsrechte.

Terms of use:

Documents in EconStor may be saved and copied for your personal and scholarly purposes.

You are not to copy documents for public or commercial purposes, to exhibit the documents publicly, to make them publicly available on the internet, or to distribute or otherwise use the documents in public.

If the documents have been made available under an Open Content Licence (especially Creative Commons Licences), you may exercise further usage rights as specified in the indicated licence.

WWW.ECONSTOR.EU

Mitglied der Leibniz-Gemeinschaft

An official publication of The North American
Institute of Science and Information Technology

ISSN:1923-0265

INTERNATIONAL JOURNAL OF

Management Science and Information Technology

NAISIT
PUBLISHERS

www.naisit.org

The International Journal of Management Science and Information Technology (IJMSIT)

NAISIT Publishers

Editor in Chief
J. J. Ferreira, University of Beira Interior, Portugal, Email: jjmf@ubi.pt

Associate Editors

Editor-in-Chief: João J. M. Ferreira, University of Beira interior, Portugal
Main Editors:
Fernando A. F. Ferreira, University Institute of Lisbon, Portugal and University of Memphis, USA
José M. Merigó Lindahl, University of Barcelona, Spain
Vanessa Ratten, La Trobe University, Melbourne, Australia
Assistant Editors:
Cristina Fernandes, Polythecnic Institute of Castelo Branco, Portugal
Jess Co, University of Southern Queensland, Australia
Marjan S. Jalali, University Institute of Lisbon, Portugal
Editorial Advisory Board:
Adebimpe Lincoln, Cardiff School of Management, UK
Aharon Tziner, Netanya Academic College, Israel
Alan D. Smith, Robert Morris University, Pennsylvania, USA
Ana Maria G. Lafuente, University of Barcelona, Spain
Anastasia Mariussen, Oslo School of Management, Norway
Christian Serarols i Tarrés, Universitat Autònoma de Barcelona, Spain
Cindy Millman, Business School -Birmingham City university, UK
Cristina R. Popescu Gh, University of Bucharest, Romania
Dessy Irawati, Newcastle University Business School, UK
Domingo Ribeiro, University of Valencia, Spain
Elias G. Carayannis, Schools of Business, USA
Emanuel Oliveira, Michigan Technological University, USA
Francisco Liñán, University of Seville, Spain
Harry Matlay, Birmingham City University, UK
Helen Lawton Smith, Birkbeck, University of London, UK
Irina Purcarea, Adjunct Faculty, ESC Rennes School of Business, France
Jason Choi, The Hong Kong Polytechnic University, HK
João Ricardo Faria, University of Texas at El Paso, USA
Jose Vila, University of Valencia, Spain
Kiril Todorov, University of National and World Economy, Bulgaria
Louis Jacques Filion, HEC Montréal, Canada
Luca Landoli, University of Naples Federico II, Italy
Luiz Ojima Sakuda, Researcher at Universidade de Säo Paulo, Brazil
Mário L. Raposo, University of Beira Interior, Portugal
Marta Peris-Ortiz, Universitat Politècnica de València, Spain
Michele Akoorie, The University of Waikato, New Zealand
Pierre-André Julien, Université du Québec à Trois-Rivières, Canada
Radwan Karabsheh, The Hashemite University, Jordan
Ricardo Chiva, Universitat Jaume I, Spain
Richard Mhlanga, National University of Science and Technology, Zimbabwe

Rodrigo Bandeira-de-Mello, Fundação Getulio Vargas – Brazil
Roel Rutten, Tilberg University - The Netherlands
Rosa Cruz, Instituto Superior de Ciências Económicas e Empresariais, Cabo Verde
Roy Thurik, Erasmus University Rotterdam, The Netherlands
Sudhir K. Jain, Indian Institute of Technology Delhi, India
Susana G. Azevedo, University of Beira Interior, Portugal
Svend Hollensen, Copenhagen Business University, Denmark
Walter Frisch, University of Vienna, Austria
Zinta S. Byrne, Colorado State University, USA

Editorial Review Board

Adem Ögüt, Selçuk University Turkey, Turkey
Alexander B. Sideridis, Agricultural University of Athens, Greece
Alexei Sharpanskykh, VU University Amsterdam, The Netherlands
Ali Kara, Pennsylvania State University -York, York, USA
Angilberto Freitas, University of Grande Rio, Brazil
Arminda do Paço, University of Beira Interior, Portugal
Arto Ojala, University of Jyväskylä, Finland
Carla Marques, University of Tras-os-Montes e Alto Douro, Portugal
Carla Pereira, University of Beira Interior, Portugal
Cem Tanova, Çukurova University, Turkey
Cristiano Tolfo, Universidade Federal de Santa Catarina, Brazil
Cristina S. Estevão, Polytechnic Institute of Castelo Branco, Portugal
Dario Miocevic, University of Split, Croatia
Davood Askarany, The University of Auckland Business School, New Zealand
Debra Revere, University of Washington, USA
Denise Kolesar Gormley, University of Cincinnati, Ohio, USA
Dickson K.W. Chiu, Hong Kong University of Science and Technology, Hong Kong
Domènec Melé, University of Navarra, Spain
Dina Miragaia, University of Beira Interior, Portugal
Emerson Mainardes, FUCAPE Business School, Brazil
Eric E. Otenyo, Northern Arizona University, USA
George W. Watson, Southern Illinois University, USA
Gilnei Luiz de Moura, Universidade Federal de Santa Maria, Brazil
Jian An Zhong, Department of Psychology,Zhejiang University, China
Joana Carneiro Pinto, Faculty of Human Sciences, Portuguese Catholic University, Lisbon, Portugal
Joaquín Alegre, University of Valencia, Spain
Joel Thierry Rakotobe, Anisfield School of Business, New Jersey, USA
Jonathan Matusitz, University of Central Florida, Sanford, FL , USA
Kailash B. L. Srivastava, Indian Institute of Technology Kharagpur, India
Karin Sanders, University of Twente,The Netherlands
Klaus G. Troitzsch, University of Koblenz-Landau, Germany
Kuiran Shi, Nanjing University of Technology, Nanjing, China
Liliana da Costa Faria, ISLA, Portugal
Luiz Fernando Capretz, University of Western Ontario, Canada
Lynn Godkin, College of Business, USA

Maggie Chunhui Liu, University of Winnipeg, Canada
Marcel Ausloos, University of Liège, Belgium
Marge Benham-Hutchins, Texas Woman's University,Denton, Texas, USA
María Nieves Pérez-Aróstegui, University of Granada, Spain
Maria Rosita Cagnina, University of Udine, Italy
Mayumi Tabata, National Dong Hwa University,Taiwan
Micaela Pinho, Portucalense University and Lusíada University, Portugal
Paolo Renna, University of Basilicata, Italy
Paula Odete Fernandes, Polytechnic Institute of Bragança, Portugal
Paulo Rupino Cunha, University of Coimbra, Portugal
Peter Loos, Saarland University, Germany
Pilar Piñero García, F. de Economia e Administración de Empresas de Vigo, Spain
Popescu N. Gheorghe, Bucharest University of Economic Studies, Bucharest, Romania
Popescu Veronica Adriana, The Commercial Academy of Satu-Mare and The Bucharest University of Economic Studies, Bucharest, Romania
Ramanjeet Singh, Institute of Management and Technology, India
Ricardo Morais, Catholic University of Portugal
Ruben Fernández Ortiz, University of Rioja, Spain
Ruppa K. Thulasiram, University of Manitoba, Canada
Soo Kim, Montclair State University,Montclair, NJ, USA
Wen-Bin Chiou, National Sun Yat-Sem University, Taiwan
Willaim Lawless, Paine College ,Augusta, GA, USA
Winston T.H. Koh, Singapore Management University, Singapore

The International Journal of Management Science and Information Technology (IJMSIT)

NAISIT Publishers

Issue 20 (Apr-Jun 2016)

Table of Contents

1 **OPPORTUNITY AND CHALLENGES USING THE CLOUD COMPUTING IN THE CASE OF MALAYSIAN HIGHER EDUCATION INSTITUTIONS**
ARFAN SHAHZAD, University Utara Malaysia, Malaysia
ABD GHANI GOLAMDIN, University Utara Malaysia, Malaysia
NOOR AZIZI ISMAIL, University Utara Malaysia , Malaysia

19 **E-TAILING QUALITY INDEX**
PANKAJ RAWAL, Indian Institute of Information Technology and Management, India
DEEPALI SINGH , Indian Institute of Information Technology and Management, India

40 **SEGMENT DISCLOSURE PRACTICES AND DETERMINANTS: EVIDENCE FROM ROMANIAN LISTED COMPANIES**
RUXANDRA-ADRIANA MATEESCU, Bucharest University of Economic Studies, Romenia

52 **ADOPTION OF E-LEARNING AMONG INSTRUCTORS IN HIGHER INSTITUTIONS IN NIGERIA: A CASE STUDY OF OBAFEMI AWOLOWO UNIVERSITY, ILE-IFE, NIGERIA**
OYELEKE OLUNIYI, Obafemi Awolowo University, Nigeria
APENA, TOMILOLA TAIWO, National Open University of Nigeria, Nigeria

This is one paper of
The International Journal of Management Science and Information Technology (IJMSIT)
Issue 20 (Apr-Jun 2016)

E-tailing Quality Index

Pankaj Rawal

Student, ABV-Indian Institute of Information Technology and Management

Postal Address: e-Business Lab, Room no. 103, Block-A, ABV-Indian Institute of Information Technology and Management, Gwalior (M.P.)-474015, India

Email Address: pankajrawal91@gmail.com

Deepali Singh (Corresponding Author)

Professor, ABV-Indian Institute of Information Technology and Management

Postal Address: e-Business Lab, Room no. 103, Block-A, ABV-Indian Institute of Information Technology and Management, Gwalior (M.P.)-474015, India

Email Address: prof.deepalipsingh@gmail.com

Abstract*:* This research study aims at developing and validating E-tailing quality index. It consists of the literature reviews of the past researches, which were done by various authors and while finding the dimensions for the e-tailing quality. The scale development methodology results into six factors comprises of Platform accommodation and customer centric functions, Satisfactory Product/Service quality, Knowledge about product and promptness, Delivery and Sales support, Customer service, Vision and Mission. It is a strategic tool to implement e-tailing quality index effectively and efficiently. This research can also be used to find the opportunities and critical areas which require attention.

Keywords: E-tailing, Retailing, Marketing, Quality Index.

Introduction

E-tailing (or electronic retailing) is the mark*et*ing of goods and services according to the demands of customers on the internet. E-tailing quality index includes the dimensions which are strongly associated with the quality of E-r*et*ailing. It improves the service quality. As E-business is becoming the popular medium for the transactions that takes place while buying and selling the products. Now days it not only restricted to sell of goods but it evolves the services which are offered to the customers with the product which adds a value to the products that leads to the customer satisfaction. As many services are provided by the e-tailing companies but som*et*imes the service quality is not good enough or it cannot be identified the dimension in which the company needs to be improved. So, there is a need to know at what extent the dimensions of the e-tailing quality exists and index the whole dimensions in which the improvement is needed and act on that. In the today's comp*et*itive environment besides the selling of goods, service quality has to be improved so as to re*t*ain customers, build brand name; brand awareness and to make the business grow.

ISSN 1923-0265 (Print) - ISSN 1923-0273 (Online) - ISSN 1923-0281 (CD-ROM), Copyright NAISIT Publishers 2016

Literature review

There has been a considerable amount of work done on E-tailing quality. There have been a number of factors that have been studied and measured by them. Wolfinbarger and Gilly (2003) predicted the e-tailing quality and measured it by dimensionalizing. They analyzed the four factors: customer service, reliability, privacy and Web design and predicted the customer's perceptions for quality and attitude towards website. Yang *et al.* (2003) provided various management related implications and recommend the ways to improve the e-tailing service quality by introducing many dimensions for the e-tailing quality. Long and McMellon, (2004) explored the determinant of the e-tailing service quality with multidimensional measures and also explored the new dimensions which lead to the area of improvement towards the online service quality. Jun *et al.*(2004)found the customer minimum satisfaction level based on their service quality and established that dimensions had impact on the overall service quality but it had no effect on the satisfaction, but there exists a positive relation between the overall service quality and customer satisfaction. Choia *et al.* (2004) studied the consumer behavior at the point of purchase (like willingness to buy, customer perceptions, values) and how it is affected by the web r*et*ail service quality. Collier and Bienstock, (2006) showed the big picture of the e service quality which is more than the website interactivity and encompasses on the outcome and recovery quality while measuring the service quality in the e-tailing. Rossiter, (2007) after Collier and Bienstock find the new measures of e-tailing quality service and found that the measure done by Collier and Bienstock for service quality is insufficient and Arshad *et al.*(2007) made a study on the land transportation services with focusing on the Internet retailing service quality and studied the behavior of the intern*et* users and their activities to d*et*ermine needs and concluded that by introducing the e-ticket service there will be improvement in the transportation service. Sahney, (2008) used the interpretive structural modeling and quality function deployment to find out success factor in online retailing. Finn, (2010) while generalizing dimensions of e-tailing service quality, concluded that data collected from the respondent is inconsistent and suggested that the manager should not make decisions on bases of the data analysis of variation occurred across the customers. Saravanan and Kannan, (2012) measured e-tailing quality in the rural market by studying the expectations and perceptions of the people living the rural areas by analyzing the behavior and preference in internet usage of the people of rural area. Cass and Carlson, (2012) examined the consumer perceptions about the website's services innovations which influence the quality and loyalty, trust and word of mouth and it is concluded that these factors have more positive effect as compared others. Türk *et al.* (2012) measured the service quality in luxury goods e-tailing and found that both design and product information has positive effect on service quality while it is shown in other studies that there is no or minimum effect of both on service quality in the Luxury goods section, and different instruments should be used to evaluate the service quality for the luxury goods and mainstream goods online. The dimensions for the e-tailing qualities and their number of citations which were found by authors are as given in the appendix.

In conclusion of literature review, it has been found that earlier researches were based on SERVQUAL and SERVPERF model, assuming that quality is the difference between expected and perceived services. And a very limited number of research has been has been carried out till date on e-tailing quality (Wolfinbarger and Gilly, 2003; Yang *et al.,* 2003; Long and Mc Mellon, 2004; Jun *et al.,* 2004), Choia *et al.,* 2004; Collier and Bienstock, 2006; Rossiter, 2007; Arshad *et al.,* 2007; Sahney, 2008; Finn, 2010; Saravanan and Kannan, 2012; Cass and Carlson, 2012, Türk *et al.,* 2012).

ISSN 1923-0265 (Print) - ISSN 1923-0273 (Online) - ISSN 1923-0281 (CD-ROM), Copyright NAISIT Publishers 2016

Methodology

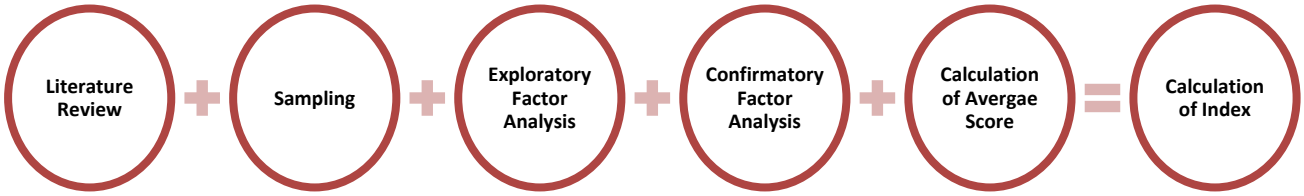

Figure 1: Methodology

- Step 1- Dimensions: The dimensions that affect the e-tailing quality are extracted from existing literature.
- Step 2- Number of citations: Firstly dimensions are reduced on the bases of number of citations in the literature review based on the responses collected from customers.
- Step 3- Questionnaire: The questionnaire is designed on the basis of above dimensions on 5-point likert-type scale.
- Step 4- Responses: The responses of the questionnaire are collected from the customers on bases of simple random sampling.
- Step 5- Reliability test: This test is carried out to check the random error causing any inconsistency of data. The value of Cronbach-alpha value should be greater than 0.7
- Step 6- Exploratory factor analysis: It is a data reduction technique to d*et*ermine possible relationships in general form to estimate relationships. Factor reduction was done by using principal component matrix and rotated component matrix as well with eigen value 1.
- Step 7- Confirmatory factor Analysis: This analysis improves and confirms the results obtained from the exploratory factor analysis
- Step 8- Weighted average score: It determines the ranks of the factor which are more effective in improving the quality of e-tailing.
- Step 9- Service quality index: Determining the acceptable range for this index.
- Step 10- Strategic implementation: Analysis and managerial implications of the results.

Results and Discussion

The feedback of the questionnaire was collected. A total of 196 responses were collected. Then data reliability is checked as well as sampling adequacy also. After that exploratory factor analysis is done. Data reliability is determined by Cronbach-alpha value, which is 0.891 in this case (i.e. > 0.7). The result shows that the questionnaire meaningfully measures service quality. By Exploratory factor analysis we can d*et*ermine 6 factors based on rotated component matrix with variance of 75.481%.

Table 1: Reliability Statistics

Cronbach's Alpha	N of Items
.891	35

Table 2: Rotated Component Matrix

Dimensions	Component					
	1	2	3	4	5	6

ISSN 1923-0265 (Print) - ISSN 1923-0273 (Online) - ISSN 1923-0281 (CD-ROM), Copyright NAISIT Publishers 2016

Satisfaction (SPSQ1)		.734				
Reliability (DSS1)				.749		
Security (DSS2)				.800		
Navigation (PACCF1)	.683					
Convenience (PACCF2)	.695					
Responsiveness (KPP1)			.765			
Service Delivery (DSS3)				.534		
Price (KPP2)			.807			
Interactivity (CS1)					.668	
Site design (CS2)					.809	
Credibility (DSS4)				.681		
Assurance		.642				
Appearance (PACCF3)	.714					
Structure (PACCF4)	.734					
Customization (PACCF5)	.865					
Product information (KPP3)			.840			
Reputation (KPP4)			.501			
Empathy (SPSQ2)		.579				
Payment modes					.534	
Personalization (PACCF6)	.598					
Word of mouth (DSS5)				.716		
Response time (PACCF7)	.707					
Competence (SPSQ3)		.568				
Usefulness (VM1)						.554
Vision (VM2)						.564
Aesthetic design (SPSQ4)		.894				
User interface (SPSQ5)		.763				
Courtesy (SPSQ6)		.681				

Initially we have 38 dimensions contributing 75.481% variance which are reduced to 26 after EFA. The dimensions are clustered into factors:

Table 3: Factor reduction

Sr. no.	Factors	Dimensions
1.	Platform accommodation and customer centric functions (PACCF)	Customization Structure Appearance Response time Convenience Navigation Personalization
2.	Satisfactory Product/Service quality (SPSQ)	aesth*et*ic design User interface Satisfaction Courtesy Empathy Comp*et*ence

ISSN 1923-0265 (Print) - ISSN 1923-0273 (Online) - ISSN 1923-0281 (CD-ROM), Copyright NAISIT Publishers 2016

3.	Knowledge about product and promptness (KPP)	Product information Price Responsiveness Reputation
4.	Delivery and Sales support (DSS)	Security Reliability Word of mouth Credibility Service Delivery
5.	Customer service (CS)	Site design Interactivity
6.	Vision and Mission (VM)	Vision Usefulness

The factors obtained in this process are confirmed by using CFA using residual data, we first determines that multidimensional model leaves PACCF6, SPSQ2, SPSQ3, KPP4.

Then we check it by structural model that how elimination of least significant factor improves the model and factor index was evaluated to improve importance of factors in model.

Table 4: Multidimensional model fit

RMSEA (Root mean square error of approximation)	0.052
CFI (Comparative fit index)	0.83
GFI (Goodness of fit index)	0.85
Chi Square/ Degree of freedom	2.10

This model points out an acceptable model fit obtained with AMOS 21 statistical tools, CFI and GFI values confirm absolute measure and incremental measure fit (Anderson and Gerbing, 1988). For a fit model errors should be around 6% to 7% (Byrne, 2001). The substantial values of indicators onto their factors vary within acceptable range, the models reflects acceptable psychom*et*ric properties (Agariya and Singh, 2012)

ISSN 1923-0265 (Print) - ISSN 1923-0273 (Online) - ISSN 1923-0281 (CD-ROM), Copyright NAISIT Publishers 2016

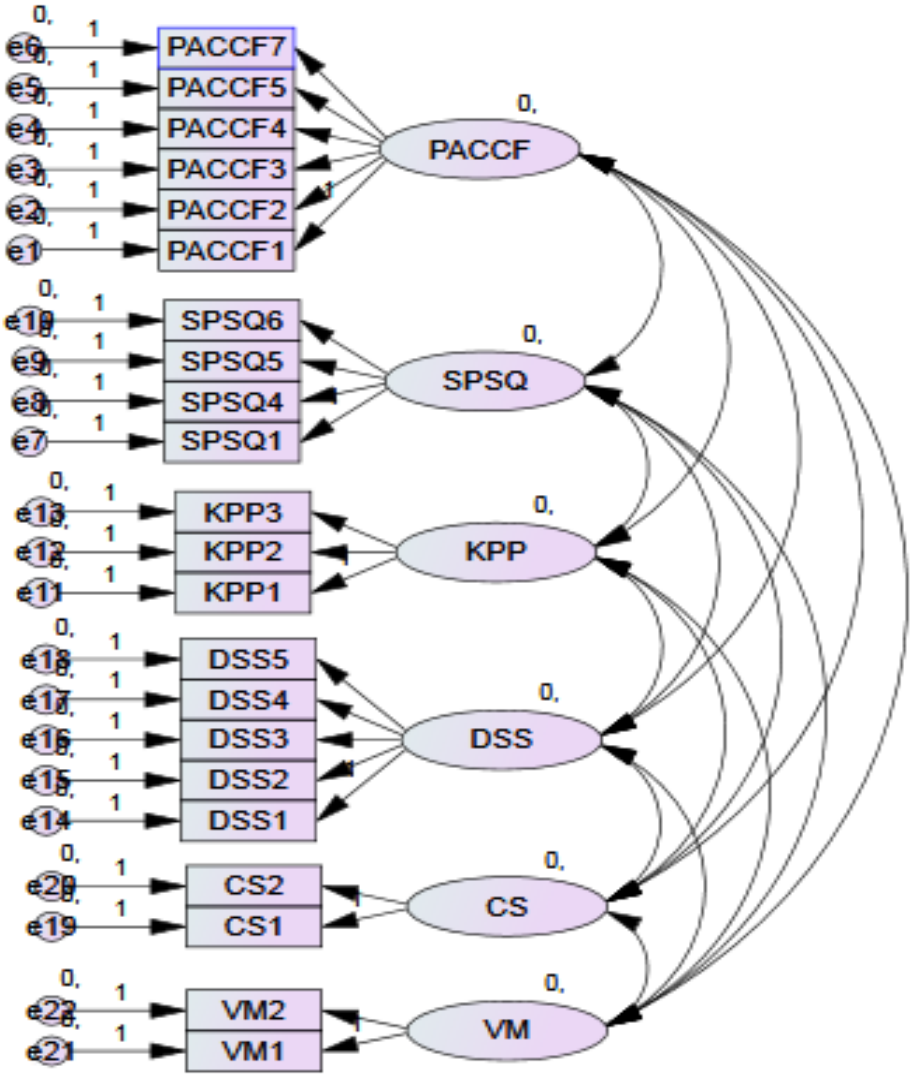

Figure 2: Multi-dimensional model

ISSN 1923-0265 (Print) - ISSN 1923-0273 (Online) - ISSN 1923-0281 (CD-ROM), Copyright NAISIT Publishers 2016

The structural model is validated by structural equation modeling which consist of a residual error in each factor as indicated in the figure

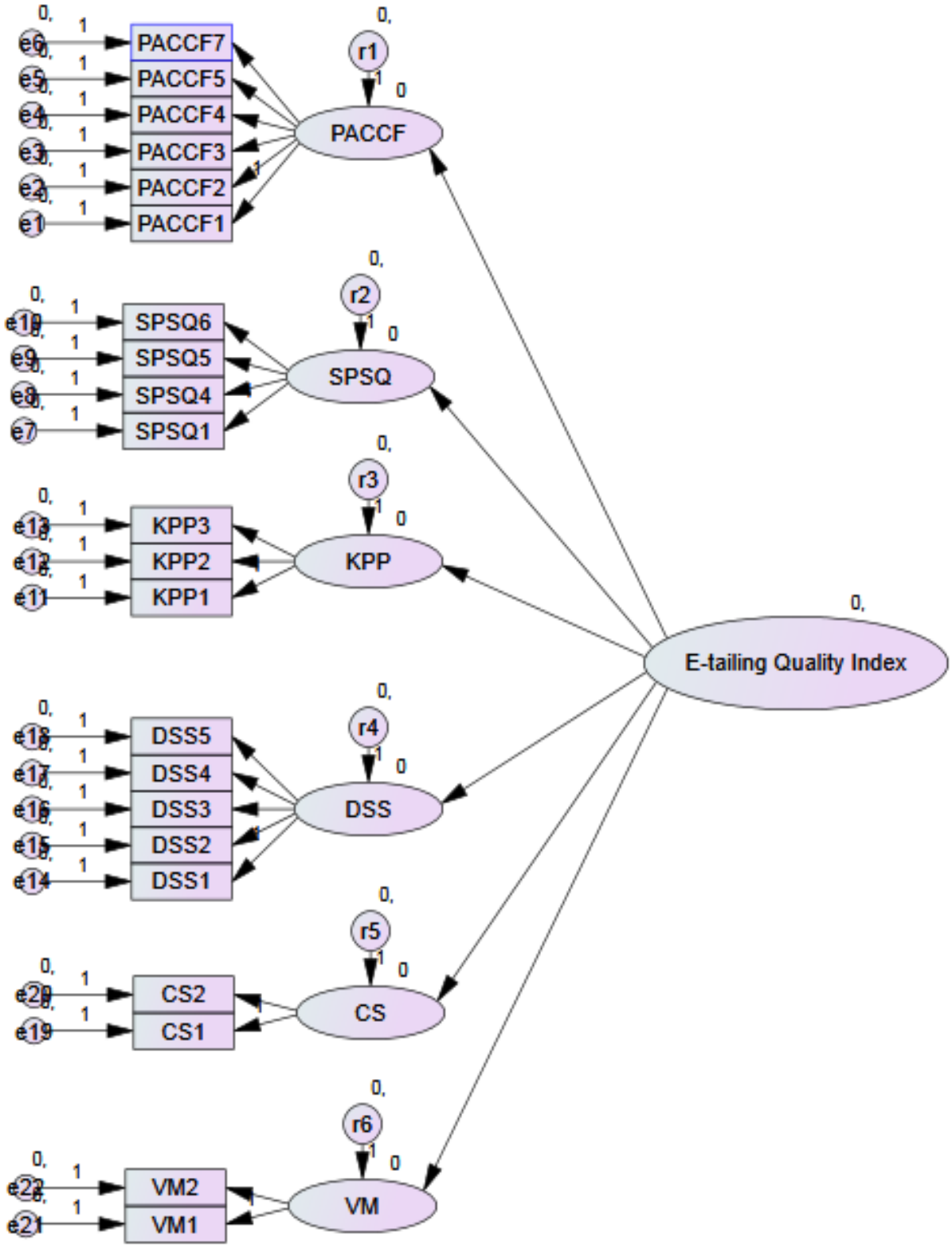

Figure 3: Structural model

ISSN 1923-0265 (Print) - ISSN 1923-0273 (Online) - ISSN 1923-0281 (CD-ROM), Copyright NAISIT Publishers 2016

The result of this model shows acceptable model fit (Anderson and Gerbing, 1988).

Table 5: Structural model fit indices

RMSEA	0.052
CFI	0.82
GFI	0.803
Chi Square/ Degree of freedom	2.05

The factor index is now evaluated with the help each factor by calculating average with help of SPSS 17

Table 6: Factor Index

Factors	Mean (Ma)	Weight (Wb)	Index (Ma*Wb)
Platform accommodation and customer centric functions	3.47	0.16	0.5552
Satisfactory Product/Service quality	3.78	0.17	0.6426
Knowledge about product and promptness	3.94	0.18	0.7092
Delivery and Sales support	3.56	0.16	0.5696
Customer Service	3.96	0.18	0.7128
Vision and Mission	3.41	0.14	0.4774

Here, in the final result we find the share of these six factors.

$$\text{E-Tailing Quality Index Score} = (Ma_1 * W_1 + Ma_2 * W_2 + \ldots\ldots + Ma_n * W_n)$$

The score comes out to be 3.664

Strategic implication

From the above result it has been concluded that the in order to improve the service quality in e-tailing we need to improve the Customer service and then next priorities are Knowledge about product and promptness; Satisfactory Product/Service quality; Delivery and Sales support; Platform accommodation and customer centric functions and Vision and mission.

Factor 1: **Platform accommodation and customer centric functions**:
Dimensions within this factor deals with the processes involving customer convenience:

- **Customization**: An e-tailing website should provide customizable products, by which they are able to get product as their needs get fulfilled without any extra cost and unwanted feature.
- **Structure**: The Structure of an e-tail organization should be flexible enough so as to increase the user-friendliness of the system, and it will be easy for customers to communicate directly.
- **Appearance**: Appearance of an e-tailing website plays a very important role in running the business. Every user first sees the design of a website then look for the products.
- **Response time**: lesser the response time higher will be efficiency as well as revenue. It depends on the problem solving approach. Lesser the time taken to solve the problem more customers will be satisfied.
- **Convenience**: Convenient procedures and services intended to save the resources and increase the accessibility and save the resources as well.

ISSN 1923-0265 (Print) - ISSN 1923-0273 (Online) - ISSN 1923-0281 (CD-ROM), Copyright NAISIT Publishers 2016

- **Navigation**: E-tailing sites should implement an easy and effective navigation system at both customer and organization ends. At the Organization end there should be process of controlling and monitoring at the customer end.

Factor 2: **Satisfactory Product/Service quality**
Service quality is a very important factor in the e-tailing. In this comp*et*itive environment every e-tailing company offers good product so if in any field an e-tailing business can improve that is service quality. As these days, customers are getting service centric as they can get a satisfactory product from any other company producing same product.

- **Aesthetic design**: Good representation of a product on a web site draws attention of a customer and can increase his willingness to buy that particular product.
- **User interface**: if the interface of a web site is user-friendly then it will be more convenient for the customers to browse through and make easy purchases.
- **Satisfaction**: Overall satisfaction of customers, dealers and organization is an essential part of a business growth; it can be in terms of Products or Services.
- **Courtesy**: Courtesy can be showed to customers in various forms (like. Delivery man, Mails, Emails, telephone etc.), through this many customer complaints can be solved.

Factor 3: **Knowledge about product and promptness**
The Dimensions under this factor indicates the product information and timekeeping.

- **Product information**: The customer always wants full information about a product at one place so that customer does not need to go to other sites or stores,
- **Price**: The price is the thing which attracts the customers very strongly; e-tailing products should be having competitive price range.
- **Responsiveness**: The organization should respond each and every individual and solve their problems or doubts. It can bring a strong trust of the customer towards the organization.

Factor 4: **Delivery and Sales support**
Dimensions under this factor deals with the sales and delivery of a product/service.

- **Security**: The customer's trust on an e-tailing organization can be built if the organization guarantees the security of product, money and their personal information as well.
- **Reliability**: The delivery channel should be reliable enough that the product delivered to the customers will be same as ordered and untapped. The organization should be reliable in such a way that the customer needs to sit back and organization should be worried about the product being delivered properly.
- **Word of mouth**: Word of mouth is a very powerful tool for promotion. It passes the information from person to person, and for this no cost has to be paid for promotion.
- **Credibility**: The quality of trust depends on the delivery channel after the product has been dispatched to the customer and also to depends on the past experience of the other customer about both organization and delivery channel.
- **Service Delivery**: Delivering services is a challenging task as this is not a tangible thing but the more challenging task is to show the services that are delivered. Service delivered can be shown to the customers via promotional e-mails, providing special discounts or getting valuable feedback mails *et*c.

Factor 5: **Customer service**

ISSN 1923-0265 (Print) - ISSN 1923-0273 (Online) - ISSN 1923-0281 (CD-ROM), Copyright NAISIT Publishers 2016

Customer service helps the organization to directly contact the customers; it helps the customers to clear their doubts and troubleshooting the problems. It can be in form of e-mails, frequently asked questions, live chats etc.

- **Site design**: web sites should be designed in such a way that the customer will get their doubts cleared without help of the customer care executive. The perfect example of this is frequently asked questions section and help boxes.
- **Interactivity**: The interaction between the customer and the organization should be effective and efficient enough that queries of the customers will be cleared without any doubt, it can be possible through various mediums (like Telephony, e-mails, live chats etc.)

Factor 6: **Vision and Mission**

- **Vision**: Vision defines the goal of an organization; it keeps motivating the organization to achieve high.
- **Usefulness**: An e-tailing organization should bring usefulness in each and every possible way to bring up some values and come with a mission statement to make the business grow and survive for the long run.

Conclusion

As E-tail market is a cash cow these days, there is much has to be done on innovation to become a star. Even though many researches have been done on this topic but no tool has been developed to provide quantitative insight. This index can be applied in many firms which can be very helpful in strategizing. This research gives insight that which factor is more effective in improving e-tailing quality. It gives both service provider as well as customer perspectives. These results are very useful as previous studies were based on SERQUAL model.

Limitation and future scope

The limitation of this study is the sample sizes which were relatively small, Diversified and large samples can further enhance the validation of this research. There is huge future scope in this study as if it is successful then it can be applied in other industries.

ISSN 1923-0265 (Print) - ISSN 1923-0273 (Online) - ISSN 1923-0281 (CD-ROM), Copyright NAISIT Publishers 2016

References

Aladwania, A.M., Palvia, P. C. (2002). Developing and validating an instrument for measuring user-perceived web quality. *Information and Management,* 39, 467–476.

Agariya, A.K. & Singh, D. (2011). What Really Defines Relationship Mark*et*ing? A Review of Definitions, General and Sector-Specific Defining Constructs. *Journal of Relationship Marketing*, 10, 203-237.

Anand, A. (2007). E-Satisfaction – A Comprehensive Framework. *International Marketing Conference on Marketing & Society,* IIM-Kolkata (8-10 April, 2007), 703-710.

Anderson, J.C., & Gerbing, D.W. (1988). Structural equation modeling in practice: A review and recommended two-step approach. *Psychological Bulletin*, 103, 411–423

AronO'Cass, J. C. (2012). An e-retailing assessment of perceived website-service innovativeness: Implications for website quality evaluations, trust, loyalty and word of mouth. *Australasian Marketing Journal,* 20, 28-36.

Arshad, N.H., Ahmad, F., Janom, N. & Mohamed A. (2007). Service Quality in Internet Retailing: A Study on Land Transportation Services. 6th WSEAS International Conference on E-ACTIVITIES, 108-113.

Balasubramanian, S., Konana, P. & Menon, N. P. (2006). Customer Satisfaction in Virtual Environments: A Study of Online Investing. *Management Science,* 49, 871-889.

Bauer, H.H., Falk, T. & Hammerschmidt, M. (2006). etransQual: A transaction process-based approach for capturing service quality in online shopping. *Journal of Business Research,* 59, 866–875.

Bernd Heinrich, M. K. (2007). How to measure data quality? – A metric based approach. *Twenty Eighth International Conference on Information Systems*, Montreal, 1-15.

Boshoff, C. (2007). A psychom*et*ric assessment of E-s-qual: a scale to measure electronic service quality. *Journal of Electronic Commerce Research,*8, 101-114.

Byrne, B.M. (2001). Structural Equation Modeling with AMOS: Basic Concepts, Applications and Programming, Lawrence Erlbaum Associates, *Mahwah, NJ*

Cheung, M. K. L. & Lee, M.K.O. (2005). Research Framework for Consumer Satisfaction with Internet Shopping. City University of Hong Kong, China. *Sprouts: Working Papers on Information Systems*, 5(26). http://sprouts.aisnet.org/5-26.

Cho, N. & Park, S. (2001). Development of electronic commerce user-consumer satisfaction index (ECUSI) for Internet shopping. *Industrial Management & Data Systems,* 101, 400-406.

Choia, B., Lee C., Lee, H., & Subramania M. (2004). Effects of Web R*et*ail Service Quality and Product Categories on Consumer Behavior: A Research Model and Empirical Exploration. 37th Hawaii International Conference on System Sciences. DOI: 10.1109/HICSS.2004.1265425

ISSN 1923-0265 (Print) - ISSN 1923-0273 (Online) - ISSN 1923-0281 (CD-ROM), Copyright NAISIT Publishers 2016

Collier, J.E. & Bienstock C. C. (2006). Measuring Service Quality in E-Retailing. *Journal of Service Research,* 8, 260-275.

Dabholkar, P.A., Shepherd, C.D. & Thorpe, D. I. (2000). A comprehensive framework for service quality: an investigation of critical conceptual and measurement issues through a longitudinal study. *Journal of Retailing,* 76, 139–173.

Finn, A. (2010). The Generalizability of the Effects of r*et*ailer e-Service Quality Dimensions. *Canadian Journal of Administrative Sciences,* 27, 24-38.

Gommans, M., Krishnan, K.S. & Scheffold, K. B. (2001). From Brand Loyalty to E-Loyalty: A Conceptual Framework. *Journal of Economic and Social Research,* 3, 43-58.

Gulechha, L. (2007). Customer Satisfaction through Quality Index. Technical report, The Project Perfect White Paper Collection, 1-7. http://www.projectperfect.com.au/downloads/Info/info_quality_index.pdf

Gummerus, J., Liljander, V., Pura, M. & Riel, A.V. (2004). Customer loyalty to content-based Web sites: the case of an online health-care service. *Journal of Services Marketing,* 18, 175-186.

Janda, S., Trocchia, P.J., Gwinner, K.P. (2002). Consumer perceptions of Internet retail service quality. *International Journal of Service Industry Management,* 13, 412-431.

Jun, M., Yang, Z. & Kim, D. (2004). Customer's perceptions of online retailing service quality and their satisfaction. *International Journal of Quality and Reliability Management,* 21, 817-840.

Kannan P. & Saravanan, R. (2012). Analysis of e-tailing service quality in rural market: a comparative study. *European journal of social sciences,* 29, 355-365.

Kim, S.Y. & Lim, Y. J. (2001). Consumer's perceived importance of and satisfaction with intern*et* shopping. *Electronic Markets,* 11, 1-7.

Kim, S. & Stoel, L. (2004). Apparel retailers: website quality dimensions and satisfaction. *Journal of Retailing and Consumer Services,* 11, 109–117.

Long, M. & McMellon, C. (2004). Exploring the determinants of retail service quality on the Internet, *Journal of Services Marketing,*18, 78-90.

Madu, C.N. & Madu, A. A. (2002). Dimensions of equality. *International Journal of Quality & Reliability Management,* 19(3), 246-258.

McKinney, V., Yoon, K. & Zahedi, F. M. (2002). The Measurement of Web-Customer Satisfaction: An Expectation and Disconfirmation Approach. *Information Systems Research,* 13, 296-315.

Paul, K. & Saravanan R. (2012). E-S-Qual: Measuring quality of e-tailing services in rural market. *Research journal of commerce and Behavioral science,* 1, 1-14.

ISSN 1923-0265 (Print) - ISSN 1923-0273 (Online) - ISSN 1923-0281 (CD-ROM), Copyright NAISIT Publishers 2016

Rossiter, J. R. (2007). Toward a Valid Measure of E-R*et*ailing Service Quality. *Journal of Theoretical and Applied Electronic Commerce Research,* 2, 36-48.

Sahney, S. (2008). Critical Success Factors in Online Retail – An Application of Quality Function Deployment and Interpretive Structural Modeling. *International Journal of Business and Information,* 3, 144–163

Scholz, M., Türk, B. & Berresheim, P. (2012). Measuring service quality in online luxury goods r*et*ailing. *Journal of Electronic Commerce Research, 13*, 88-103.

Srinivasan, S.S., Anderson, R. & Ponnavolu, K. (2002). Customer loyalty in e-commerce: an exploration of its antecedents and consequences. *Journal of Retailing,* 78, 41–50.

Surjadjaja, H., Ghosh, S. & Antony, J. (2003). Determining and assessing the determinants of e-service operations. *Managing Service Quality,*13, 39 - 53.

Szymanski, D.M. & Hise, R. T. (2000). E-satisfaction: an initial examination. *Journal of Retailing,* 76, 309–322.

Torkzadeh, G. & Dhillon G. (2000). Measuring Factors that Influence the Success of Internet Commerce. *Information Systems Research,* 13, 187-204.

Wang, J., Sha, Z. & Wang, H. (2004). A Conceptual Framework for E-tailing Quality and Its Evaluation. The Fourth International Conference on Electronic Business, Beijing, 466-469.

Wolfinbarger, M. & Gilly, M. C. (2003). etailQ: dimensionalizing, measuring and predicting e-tail quality. *Journal of Retailing,* 79, 183-198.

Yang, Z., Peterson, R.T. & Cai, S. (2003). Services quality dimensions of Intern*et* r*et*ailing: an exploratory analysis. *Journal of service marketing,*17, 685-700.

Yoo, B. & Donthu, N. (2001). Developing a scale to measure perceived quality of an internet shopping site. *Quarterly Journal of Electronic Commerce,* 2, 31-47.

ISSN 1923-0265 (Print) - ISSN 1923-0273 (Online) - ISSN 1923-0281 (CD-ROM), Copyright NAISIT Publishers 2016

Appendix

Sr no	Dimensions	Authors	No. of citations
1.	Satisfaction	Dabholkar*et al.* (2000), Cho and park (2001), Gommans*et al.* (2001), Aladwani and palvia (2002), Janda*et al.* (2002), Madu and Madu (2002), P*et*erson *et al.* (2003), Surjadjaja*et al.* (2003), Balasubramanian *et al.* (2003), Wang *et al.* (2004), Gummerus *et al.* (2004), Minjoon *et al.* (2004), Kim and Lim (2006), Collier and Bienstock (2006), Cheung and lee (2005), Hammerschmidt *et al.* (2006), Anand (2007), Boshoff (2007), Sahney (2008), Saravanan *et* al. (2012)	20
2.	Reliability	Dabholkar*et al.* (2000), Boonghee and Donthu (2001), Gommans *et al.* (2001), McKinney *et al.* (2002), Janda *etal.* (2002), Aladwani and palvia (2002), P*et*erson *et al.* (2003), Surjadjaja *et al.* (2003), Balasubramanian *et* al. (2003), Gummerus *et al.* (2004), Wang *et al.* (2004), Minjoon *et al.* (2004), Cheung and lee (2005), Collier and Bienstock (2006), Kim and Lim (2006), Hammerschmidt *et al.* (2006), Boshoff (2007), Sahney (2008), Saravanan *et* al. (2012),	19
3.	Security	Boonghee and Donthu (2001), Gommans *et al.* (2001), Janda *etal.* (2002), Madu and Madu (2002), Aladwani and palvia (2002) ,Balasubramanian *et* al. (2003), P*et*erson *et al.* (2003), Surjadjaja *et al.* (2003), Gummerus *et al.* (2004), Wang *et al.* (2004), Minjoon *et al.* (2004), Cheung and lee (2005), Kim and Lim (2006), Hammerschmidt *et al.* (2006), Collier and Bienstock (2006), Anand (2007), Sahney (2008), Saravanan *et* al. (2012),	18
4.	Access	Boonghee and Donthu (2001), Gommans *et al.* (2001), McKinney *et al.* (2002), Janda *etal.* (2002), Aladwani and palvia (2002), P*et*erson *et al.* (2003), Balasubramanian *et* al. (2003), Surjadjaja *et al.* (2003), Wang *et al.* (2004), Minjoon *et al.* (2004), Gummerus *et al.* (2004), Cheung and lee (2005), Kim and Lim (2006), Collier and Bienstock (2006), Boshoff (2007), Anand (2007), Sahney (2008), Saravanan *et* al. (2012),	18
5.	Navigation	Boonghee and Donthu (2001), Gommans *et al.* (2001), McKinney *et al.* (2002), Janda *etal.* (2002), Aladwani and palvia (2002), P*et*erson *et al.* (2003), Surjadjaja *et al.* (2003), Gummerus *et al.* (2004), Wang *et al.* (2004), Minjoon *et al.* (2004), Cheung and lee (2005), Kim and Lim (2006), Hammerschmidt *et al.* (2006), Collier and Bienstock (2006), Boshoff (2007), Anand (2007), Sahney (2008), Saravanan *et* al. (2012),	18

ISSN 1923-0265 (Print) - ISSN 1923-0273 (Online) - ISSN 1923-0281 (CD-ROM), Copyright NAISIT Publishers 2016

6.	Trust	Boonghee and Donthu (2001), McKinney *et al.* (2002), Madu and Madu (2002), Janda *et al.* (2002), P*et*erson *et al.* (2003), Balasubramanian *et* al. (2003), Surjadjaja *et al.* (2003), Minjoon *et al.* (2004), Gummerus *et al.* (2004), Cheung and lee (2005), Collier and Bienstock (2006), Boshoff (2007), Anand (2007), Sahney (2008), Saravanan *et* al. (2012)	17
7.	Privacy	Boonghee and Donthu (2001), Gommans *et al.* (2001), Janda *etal.* (2002), Aladwani and palvia (2002), P*et*erson *et al.* (2003), Balasubramanian *et* al. (2003), Surjadjaja *et al.* (2003), Gummerus *et al.* (2004), Wang *et al.* (2004), Minjoon *et al.* (2004), Cheung and lee (2005), Kim and Lim (2006), Collier and Bienstock (2006), Boshoff (2007), Anand (2007), Sahney (2008), Saravanan *et* al. (2012),	17
8.	Performance	Boonghee and Donthu (2001), Gommans *et al.* (2001), McKinney *et al.* (2002), Janda *etal.* (2002), Aladwani and palvia (2002), P*et*erson *et al.* (2003), Balasubramanian *et* al. (2003), Surjadjaja *et al.* (2003), Wang *et al.* (2004), Minjoon *et al.* (2004), Gummerus *et al.* (2004), Cheung and lee (2005), Kim and Lim (2006), Collier and Bienstock (2006), Boshoff (2007), Sahney (2008), Saravanan *et* al. (2012)	17
9.	Convenience	Gommans *et al.* (2001), McKinney *et al.* (2002), Janda *etal.* (2002), P*et*erson *et al.* (2003), Surjadjaja *et al.* (2003), Balasubramanian *et* al. (2003), Gummerus *et al.* (2004), Minjoon *et al.* (2004), Cheung and lee (2005), Kim and Lim (2006), Collier and Bienstock (2006), Boshoff (2007), Anand (2007), Sahney (2008), Saravanan *et* al. (2012)	15
10.	Responsiveness	Boonghee and Donthu (2001), Janda *etal.* (2002), Aladwani and palvia (2002), P*et*erson *et al.* (2003), Surjadjaja *et al.* (2003), Balasubramanian *et* al. (2003), Wang *et al.* (2004), Minjoon *et al.* (2004), Gummerus *et al.* (2004), Cheung and lee (2005), Hammerschmidt *et al.* (2006), Collier and Bienstock (2006), Boshoff (2007), Anand (2007), Saravanan *et* al. (2012)	15
11.	Delivery	P*et*erson *et al.* (2003), Surjadjaja *et al.* (2003), McKinney *et al.* (2002), Kim and Lim (2006), Janda *etal.* (2002), Gummerus *et al.* (2004), Cheung and lee (2005), Gommans *et al.* (2001), Boshoff (2007), Anand (2007), Boonghee and Donthu (2001), Minjoon *et al.* (2004), Saravanan *et* al. (2012), Sahney (2008), Collier and Bienstock (2006)	15
12.	Speed	Boonghee and Donthu (2001), Gommans *et al.* (2001), McKinney *et al.* (2002), Aladwani and palvia (2002), Janda *etal.* (2002), P*et*erson *et al.* (2003), Balasubramanian *et* al. (2003), Wang *et al.* (2004), Minjoon *et al.* (2004), Cheung and lee (2005), Collier and Bienstock (2006), Boshoff (2007), Anand (2007), Sahney (2008), Saravanan *et* al. (2012)	15

ISSN 1923-0265 (Print) - ISSN 1923-0273 (Online) - ISSN 1923-0281 (CD-ROM), Copyright NAISIT Publishers 2016

13.	Ease of use	Cho and park (2001), Boonghee and Donthu (2001), Gommans *et al.* (2001), Aladwani and palvia (2002), Janda *etal.* (2002), P*et*erson *et al.* (2003), Balasubramanian *et al.* (2003), Gummerus *et al.* (2004), Minjoon *et al.* (2004), Wang *et al.* (2004), Cheung and lee (2005), Collier and Bienstock (2006), Anand (2007), Sahney (2008), Saravanan *et* al. (2012)	15
14.	Price	Gommans *et al.* (2001), Boonghee and Donthu (2001), Janda *etal.* (2002), P*et*erson *et al.* (2003), Balasubramanian *et* al. (2003), Surjadjaja *et al.* (2003), Gummerus *et al.* (2004), Wang *et al.* (2004), Minjoon *et al.* (2004), Cheung and lee (2005), Hammerschmidt *et al.* (2006), Collier and Bienstock (2006), Anand (2007), Sahney (2008)	14
15.	Interactivity	Gommans *et al.* (2001), Boonghee and Donthu (2001), McKinney *et al.* (2002), Aladwani and palvia (2002), Surjadjaja *et al.* (2003), Gummerus *et al.* (2004), Wang *et al.* (2004), Minjoon *et al.* (2004), Cheung and lee (2005), Collier and Bienstock (2006), Sahney (2008), Saravanan *et al.* (2012)	12
16.	Site design	Boonghee and Donthu (2001), Gommans *et al.* (2001), Aladwani and palvia (2002), McKinney *et al.* (2002), Janda *etal.*(2002), Gummerus *et al.* (2004), Wang *et al.* (2004), Minjoon *et al.* (2004), Cheung and lee (2005), Collier and Bienstock (2006), Anand (2007), Sahney (2008)	12
17.	Credibility	Boonghee and Donthu (2001), Gommans *et al.* (2001), Madu and Madu (2002), Janda *etal.* (2002), P*et*erson *et al.* (2003), Balasubramanian *et* al. (2003), Gummerus *et al.* (2004), Wang *et al.* (2004), Minjoon *et al.* (2004), Cheung and lee (2005), Collier and Bienstock (2006), Sahney (2008)	12
18.	Assurance	Boonghee and Donthu (2001), Madu and Madu (2002), Janda *etal.* (2002), P*et*erson *et al.* (2003), Balasubramanian *et* al. (2003), Wang *et al.* (2004), Minjoon *et al.* (2004), Cheung and lee (2005), Collier and Bienstock (2006), Boshoff (2007), Saravanan *et* al. (2012)	11
19.	Appearance	Gommans *et al.* (2001), Boonghee and Donthu (2001), Aladwani and palvia (2002), P*et*erson *et al.* (2003), Balasubramanian *et* al. (2003), Minjoon *et al.* (2004), Cheung and lee (2005), Collier and Bienstock (2006), Boshoff (2007), Sahney (2008), Saravanan *et* al. (2012)	11
20.	policy	Boonghee and Donthu (2001), McKinney *et al.* (2002), Madu and Madu (2002), Balasubramanian *et* al. (2003), P*et*erson *et al.* (2003), Surjadjaja *et al.* (2003), Minjoon *et al.* (2004) Cheung and lee (2005), Kim and Lim (2006), Hammerschmidt *et al.* (2006), Anand (2007)	11
21.	Structure	Gommans *et al.* (2001), Boonghee and Donthu (2001), McKinney *et al.* (2002), Aladwani and palvia (2002), Madu and Madu (2002), Balasubramanian *et* al. (2003), Gummerus *et al.* (2004), Minjoon *et al.* (2004), Collier and Bienstock (2006), Boshoff (2007), Sahney (2008)	11

ISSN 1923-0265 (Print) - ISSN 1923-0273 (Online) - ISSN 1923-0281 (CD-ROM), Copyright NAISIT Publishers 2016

22.	Customization	Gommans *et al.* (2001), Aladwani and palvia (2002), Madu and Madu (2002), Janda *etal.* (2002), P*et*erson *et al.* (2003), Gummerus *et al.* (2004), Wang *et al.* (2004), Minjoon *et al.* (2004), Cheung and lee (2005), Sahney (2008), Saravanan *et* al. (2012)	11
23.	Choice	Gommans *et al.* (2001), McKinney *et al.* (2002), Aladwani and palvia (2002), Balasubramanian *et* al. (2003), Surjadjaja *et al.* (2003), Minjoon *et al.* (2004), Cheung and lee (2005), Kim and Lim (2006), Collier and Bienstock (2006), Anand (2007), Saravanan *et al.* (2012)	11
24.	loyalty	Boonghee and Donthu (2001), Gommans *et al.* (2001), Madu and Madu (2002), Janda *etal.* (2002), P*et*erson *et al.* (2003), Balasubramanian *et* al. (2003), Gummerus *et al.* (2004), Ang*et al.* (2004), Cheung and lee (2005), Boshoff (2007), Saravanan *et* al. (2012)	11
25.	Efficiency	Boonghee and Donthu (2001), Janda *etal.* (2002), P*et*erson *et al.* (2003), Balasubramanian *et* al. (2003), Wang *et al.* (2004), Minjoon *et al.* (2004), Cheung and lee (2005), Collier and Bienstock (2006), Boshoff (2007), Anand (2007)	10
26.	Functionality	Boonghee and Donthu (2001), Aladwani and palvia (2002), Surjadjaja *et al.* (2003),Gummerus *et al.* (2004), Minjoon *et al.* (2004), Collier and Bienstock (2006), Hammerschmidt *etal.*(2006), Anand (2007), Boshoff (2007)	9
27.	Product information	Cho and park (2001), McKinney *et al.* (2002), Janda *etal.* (2002), Minjoon *et al.* (2004), Cheung and lee (2005), Collier and Bienstock (2006), Hammerschmidt *et al.* (2006), Anand (2007), Sahney (2008)	9
28.	Reputation	Boonghee and Donthu (2001), Gommans *et al.* (2001), Madu and Madu (2002), P*et*erson *et al.* (2003), Surjadjaja *et al.* (2003), Balasubramanian *et* al. (2003), Gummerus *et al.* (2004), Minjoon *et al.* (2004), Wang *et al.* (2004)	9
29.	empathy	Madu and Madu (2002), Janda *etal.* (2002), Aladwani and palvia (2002), Balasubramanian *et* al. (2003), P*et*erson *et al.* (2003), Wang *et al.* (2004), Minjoon *et al.* (2004), Cheung and lee (2005), Collier and Bienstock (2006)	9
30.	Payment modes	Gommans *et al.* (2001), Boonghee and Donthu (2001), P*et*erson *et al.* (2003), Surjadjaja *et al.* (2003), Balasubramanian *et* al. (2003), Minjoon *et al.* (2004), Cheung and lee (2005), Kim and Lim (2006), Saravanan *et* al. (2012)	9
31.	Personalization	Janda *etal.* (2002), Aladwani and palvia (2002), P*et*erson *et al.* (2003), Wang *et al.* (2004), Minjoon *et al.* (2004), Cheung and lee (2005), Collier and Bienstock (2006), Sahney (2008), Saravanan *et* al. (2012)	9
32.	Information quality	McKinney *et al.* (2002), Aladwani and palvia (2002), P*et*erson *et al.* (2003), Minjoon *et al.* (2004), Cheung and lee (2005), Kim and Lim (2006), Collier and Bienstock (2006), Saravanan *et* al. (2012)	8

ISSN 1923-0265 (Print) - ISSN 1923-0273 (Online) - ISSN 1923-0281 (CD-ROM), Copyright NAISIT Publishers 2016

33.	Entertainment	Boonghee and Donthu (2001), Gommans *et al.* (2001), McKinney *et al.* (2002), Cheung and lee (2005), Kim and Lim (2006), Collier and Bienstock (2006), Hammerschmidt *et al.* (2006), Anand (2007), Saravanan *et* al. (2012)	8
34.	Word of mouth	Boonghee and Donthu (2001), Janda *etal.* (2002), Surjadjaja *et al.* (2003), Balasubramanian *et* al. (2003), Gummerus *et al.* (2004), Cheung and lee (2005), Collier and Bienstock (2006), Saravanan *et* al. (2012)	8
35.	Response time	Gommans *et al.* (2001), P*et*erson *et al.* (2003), Balasubramanian *et* al. (2003), Wang *et al.* (2004), Minjoon *et al.* (2004), Cheung and lee (2005), Collier and Bienstock (2006)	7
36.	Trustworthiness	Boonghee and Donthu (2001), P*et*erson *et al.* (2003), Balasubramanian *et al.* (2003), Minjoon *et al.* (2004), Gummerus *et al.* (2004), Boshoff (2007), Saravanan *et al.* (2012)	7
37.	Appearance	Boonghee and Donthu (2001), Gommans *et al.* (2001), Aladwani and palvia (2002), P*et*erson *et al.* (2003), Balasubramanian *et al.* (2003), Cheung and lee (2005), Boshoff (2007)	7
38.	Comp*et*ence	Boonghee and Donthu (2001), P*et*erson *et al.* (2003), Surjadjaja *et al.* (2003), Balasubramanian *et al.* (2003), Wang *et al.* (2004), Gummerus *et al.* (2004), Minjoon *et al.* (2004)	7
39.	Business process	P Aladwani and palvia (2002), *et*erson *et al.*(2003), Surjadjaja *et al.* (2003), Wang *et al.* (2004), Minjoon *et al.* (2004), Collier and Bienstock (2006)	6
40.	Usefulness	Boonghee and Donthu (2001), McKinney *et al.* (2002), Aladwani and palvia (2002), Anand (2007), Sahney (2008), Saravanan *et al.* (2012),	6
41.	Usability	McKinney *et al.* (2002), Aladwani and palvia (2002), Gummerus *et al.* (2004), Cheung and lee (2005), Collier and Bienstock (2006), Anand (2007)	6
42.	Vision	P*et*erson *et al.* (2003), Surjadjaja *et al.* (2003), Balasubramanian *et al.* (2003), Minjoon *et al.* (2004), Collier and Bienstock (2006)	5
43.	aesth*et*ic design	Boonghee and Donthu (2001), Janda *et al.* (2002), Wang *et al.* (2004), Minjoon *et al.* (2004), Collier and Bienstock (2006)	5
44.	processing speed	Boonghee and Donthu (2001), Janda *et al.* (2002), Wang *et al.* (2004), Minjoon *et al.* (2004), Collier and Bienstock (2006)	5
45.	User interface	Janda *et al.* (2002), Gummerus *et al.* (2004), Minjoon *et al.* (2004), Cheung and lee (2005), Collier and Bienstock (2006)	5
46.	Search engine	McKinney *et al.* (2002), P*et*erson *et al.* (2003), Surjadjaja *et al.* (2003), Gummerus *et al.* (2004), Saravanan *et al.* (2012)	5
47.	Service delivery	Surjadjaja *et al.* (2003), Gummerus *et al.* (2004), Cheung and lee (2005), Boshoff (2007) , Sahney (2008)	5

ISSN 1923-0265 (Print) - ISSN 1923-0273 (Online) - ISSN 1923-0281 (CD-ROM), Copyright NAISIT Publishers 2016

48.	courtesy	Peterson *et al.* (2003), Minjoon *et al.* (2004), Wang *et al.* (2004), Cheung and lee (2005), Kim and Lim (2006)	5
49.	On-time delivery	Gommans *et al.* (2001), Cheung and lee (2005), Collier and Bienstock (2006), Anand (2007),	4
50.	System quality	Aladwani and palvia (2002), McKinney *et al.* (2002), Cheung and lee (2005), Saravanan *et al.* (2012)	4
51.	Purchasing process	Cho and park (2001), McKinney *et al.* (2002), Cheung and lee (2005), Boshoff (2007)	4
52.	Merchandising	Janda *et al.* (2002), Cheung and lee (2005), Anand (2007), Saravanan *et al.* (2012)	4
53.	System availability	Balasubramanian *et al.* (2003), Collier and Bienstock (2006), Boshoff (2007)	3
54.	Behavioral Intent	Cheung and lee (2005), Collier and Bienstock (2006), Saravanan *et al.* (2012)	3
55.	Technical quality	Dabholkar*et al.* (2000), Janda *et al.* (2002), Wang *et al.* (2004)	3
56.	Informational fit to task	Wang *et al.* (2004) , Hammerschmidt *et al.*(2006), Anand (2007)	3
57.	Community	Gommans *et al.* (2001), Anand (2007), Saravanan *et al.* (2012)	3
58.	Product offering	Janda *et al.* (2002), Anand (2007), Sahney (2008)	3
59.	User friendliness	Aladwani and palvia (2002), Peterson *et al.* (2003)	2
60.	Distinctiveness	Surjadjaja *et al.* (2003), Collier and Bienstock (2006)	2
61.	Intuitiveness	Wang *et al.* (2004), Collier and Bienstock (2006)	2
62.	Substitutability	Wang *et al.* (2004), Collier and Bienstock (2006)	2
63.	Access to foreign goods	Gommans *et al.* (2001), Sahney (2008)	2
64.	Continuous improvement	Peterson *et al.* (2003), Sahney (2008)	2
65.	Ease of navigation and search	Hammerschmidt *et al.*(2006), Sahney (2008)	2
66.	Transaction safety	Minjoon *et al.* (2004), Sahney (2008)	2
67.	Catalogs	Boonghee and Donthu (2001), Minjoon *et al.* (2004)	2
68.	Action quality	Wang *et al.* (2004), Sahney (2008)	2
69.	Content quality	Aladwani and palvia (2002), Saravanan *et al.* (2012)	2
70.	Serviceability	Minjoon *et al.* (2004), Anand (2007)	2
71.	Value Propositions	Gommans *et al.* (2001), Hammerschmidt *et al.*(2006)	2
72.	Consumer service	Cho and park (2001), Cheung and lee (2005)	2
73.	Purchase result and delivery	Cho and park (2001), Cheung and lee (2005)	2
74.	Delivery time and charges	Cho and park (2001), Cheung and lee (2005)	2

ISSN 1923-0265 (Print) - ISSN 1923-0273 (Online) - ISSN 1923-0281 (CD-ROM), Copyright NAISIT Publishers 2016

75.	Additional information service	Cho and park (2001), Cheung and lee (2005)	2
76.	Order accuracy	Gommans *et al.* (2001), Collier and Bienstock (2006)	2
77.	Contact information	Aladwani and palvia (2002), Boshoff (2007)	2
78.	Storage capability	Madu and Madu (2002), Minjoon *et al.* (2004)	2
79.	System integrity	Madu and Madu (2002), Minjoon *et al.* (2004)	2
80.	Collaboration	P*et*erson *et al.* (2003), Minjoon *et al.* (2004)	2
81.	Product representation	Collier and Bienstock (2006)	1
82.	Privacy policy	Saravanan *et al.* (2012)	1
83.	Overall experience	Collier and Bienstock (2006)	1
84.	HTML quality	Collier and Bienstock (2006)	1
85.	Post sales service	Sahney (2008)	1
86.	Transaction privacy	Sahney (2008)	1
87.	Error free processing	Sahney (2008)	1
88.	User recognition	Saravanan *et al.* (2012)	1
89.	Extra service	Saravanan *et al.* (2012)	1
90.	Frequent buyer incentives	Saravanan *et al.* (2012)	1
91.	Result quality	Wang *et al.* (2004)	1
92.	Technical adequacy	Aladwani and palvia (2002)	1
93.	environmental security	Balasubramanian *et al.* (2003)	1
94.	operational comp*et*ence	Balasubramanian *et al.* (2003)	1
95.	Trust disposition	Balasubramanian *et al.* (2003)	1
96.	Price perception	Balasubramanian *et al.* (2003)	1
97.	Attitudinal Loyalty	Gommans *et al.* (2001)	1
98.	Brand Building	Gommans *et al.* (2001)	1
99.	Order condition	Collier and Bienstock (2006)	1
100.	Interactive fairness	Collier and Bienstock (2006)	1
101.	Procedural fairness	Collier and Bienstock (2006)	1
102.	Personal attention	Dabholkar*et al.* (2000)	1

ISSN 1923-0265 (Print) - ISSN 1923-0273 (Online) - ISSN 1923-0281 (CD-ROM), Copyright NAISIT Publishers 2016

103.	comfort feature	Dabholkar*et al.* (2000)	1
104.	Attractiveness of selection	Dabholkar*et al.* (2000)	1
105.	Functional benefits	Dabholkar*et al.* (2000)	1
106.	Emotional benefits	Dabholkar*et al.* (2000)	1
107.	Contact interactivity	Saravanan *et al.* (2012)	1
108.	Cultivation	Saravanan *et al.* (2012)	1
109.	product value	Hammerschmidt *et al.*(2006)	1

ISSN 1923-0265 (Print) - ISSN 1923-0273 (Online) - ISSN 1923-0281 (CD-ROM), Copyright NAISIT Publishers 2016