ECONSTOR
Make Your Publications Visible.

A Service of
ZBW
Leibniz-Informationszentrum Wirtschaft
Leibniz Information Centre for Economics

Engl, Florian; Czernich, Nina; Kretschmer, T.; Kiessl, Thomas; Falck, Oliver

**Article**

# Regulatory Framework for Next-Generation Access Networks Across Europe

CESifo DICE Report

**Provided in Cooperation with:**
Ifo Institute – Leibniz Institute for Economic Research at the University of Munich

*Suggested Citation:* Engl, Florian; Czernich, Nina; Kretschmer, T.; Kiessl, Thomas; Falck, Oliver (2009) : Regulatory Framework for Next-Generation Access Networks Across Europe, CESifo DICE Report, ISSN 1613-6373, ifo Institut für Wirtschaftsforschung an der Universität München, München, Vol. 07, Iss. 1, pp. 35-40

This Version is available at:
https://hdl.handle.net/10419/166959

**Standard-Nutzungsbedingungen:**

Die Dokumente auf EconStor dürfen zu eigenen wissenschaftlichen Zwecken und zum Privatgebrauch gespeichert und kopiert werden.

Sie dürfen die Dokumente nicht für öffentliche oder kommerzielle Zwecke vervielfältigen, öffentlich ausstellen, öffentlich zugänglich machen, vertreiben oder anderweitig nutzen.

Sofern die Verfasser die Dokumente unter Open-Content-Lizenzen (insbesondere CC-Lizenzen) zur Verfügung gestellt haben sollten, gelten abweichend von diesen Nutzungsbedingungen die in der dort genannten Lizenz gewährten Nutzungsrechte.

**Terms of use:**

*Documents in EconStor may be saved and copied for your personal and scholarly purposes.*

*You are not to copy documents for public or commercial purposes, to exhibit the documents publicly, to make them publicly available on the internet, or to distribute or otherwise use the documents in public.*

*If the documents have been made available under an Open Content Licence (especially Creative Commons Licences), you may exercise further usage rights as specified in the indicated licence.*

WWW.ECONSTOR.EU

Mitglied der Leibniz-Gemeinschaft

# Regulatory Framework for Next-Generation Access Networks Across Europe*

Nina Czernich, Florian Engl, Oliver Falck, Thomas Kiessl and Tobias Kretschmer**

## Introduction

Telecommunication networks around the globe are in transition from traditional public switched telephone networks to modern IP-based next-generation networks. This transition started in the backbone networks where increased demand led to a capacity shortage and the need for new fiber optic technologies. At present, fiber is standard in the backbone infrastructure, but the so-called last mile between the customer and the main distribution frame is generally still copper-based. The last mile is usually owned by the incumbent telecommunication carrier. However, due to the convergence of media and, eventually, increasing demand for high-speed Internet access, the last mile, too, has finally reached its physical limit and upgrading it to fiber is necessary. Eventually, the substitution of copper wire by fibre optic on the last mile, i.e., the construction of next-generation access networks, will complete the transition to the next-generation network.

This development raises the question of whether next-generation access networks should be regulated. The focus of the debate is whether competition between telecommunication carriers encourages or discourages innovation and investment in new technology. On the one hand, it is argued that the incumbent's new infrastructure investment needs to be regulated, i.e., access should be granted to competitors so as to prevent the incumbent from again gaining a dominant position and concentrating market power in the telecommunications sector. On the other hand, it is claimed that investors need to be guaranteed pioneer rents as an inducement to make the investments in the first place and, thus, new investments should not be regulated.

This article compares different regulatory strategies for next-generation access networks across European countries (Germany, France, the Netherlands and the United Kingdom). In contrast to the United States, where next-generation facilities were deregulated in 2003, access regulation in Europe is still being discussed at both the national and European levels (cf. European Parliament 2008). Thus, this article will describe the different institutional settings with regard to access regulation of NGA across European countries.

We begin with a short technical description of the structure of the last mile. We then compare different regulatory strategies for the upgrade of the last mile to next-generation access networks and end with policy suggestions for regulation of telecommunication that will promote both competition and investment in next-generation access networks.

## The structure of the last mile

The last mile is built hierarchically. Currently, many customers are connected via copper wire to a street cabinet; from there, the copper wires are bundled to the main distribution frame (MDF). At the MDF, the copper wires are connected to the fiber network via a digital subscriber line access multiplexer (DSLAM). The last mile is usually owned by the incumbent telecommunication carrier; however, the fiber backbone network may be owned by a competitor who, at the MDF, connects the customer, who has just "traveled" over the incumbent's last mile, to

* This article draws heavily on Czernich, N., O. Falck, T. Kiessl and T. Kretschmer (2008): "Regulierung in Telekommunikationsmärkten: Technologische Dynamik und Wettbewerbspotenziale", *ifo Beiträge zur Wirtschaftsforschung* 32.

** Nina Czernich, Oliver Falck, and Thomas Kiessl are researchers at the Ifo Institute for Economic Research at the University of Munich. Tobias Kretschmer is director of the Institute for Communication Economics (ICE) at the University of Munich and research professor at the Ifo Institute for Economic Research. Florian Engl is research assistant at the Ifo Institute for Economic Research.

**Figure**

THE STRUCTURE OF THE BROADBAND NETWORK

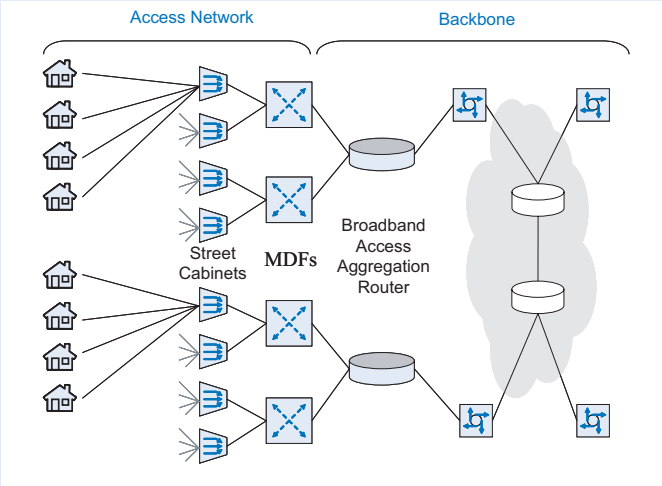


Source: Own Figure based on Anell et al. (2007).

its own fiber backbone network in a process known as local loop unbundling (LLU). Depending on the distance between the MDF and customer, a bandwidth of up to 16 MB/sec can be realized. The Figure summarizes the structure of the telecommunication network in transition to the next-generation network (NGN).

Bandwidth over the last mile can be increased by substituting fiber optics for the copper wire between the MDF and the street cabinet and installing a DSLAM in the street cabinet (fiber to the curb [FFTC]). This strategy makes possible a bandwidth up to 50 MB/sec (VDSL). Installing fiber optics for the entire distance between the MDF and the customer (fiber to the building [FTTB], or fiber to the home [FFTH]) removes any last-mile bandwidth restrictions (at least temporarily). With the completion of the next-generation access network (NGA), many components of the traditional access network become obsolete, including the MDFs, thus reducing the network's operating costs. This reorganization also affects competitors and their business models, of course, since they can no longer "pick up" their customers at the MDF.

How the incumbent telecommunication carrier arrives at NGA is heavily dependent on three factors: the structure of the traditional telecommunication network (i.e., the distance between MDFs and customers or the availability of alternative infrastructure), the demand for high-speed Internet and the regulatory framework for the NGA. Competitors with their own backbone network may either imitate the incumbent's strategy or engage in their own roll-out strategy, a strategy often pursued by public utilities that use their own ducts and sewers to roll out a FTTB/FTTH network.

## Roll-out strategies and regulatory framework for NGAs across europe

*Germany*

In Germany in 2007, there were 22.6 broadband subscribers per 100 inhabitants (Bundesnetzagentur 2009). With a share of nearly 92 percent of the market, DSL clearly is the dominant broadband access technology (Bundesnetzagentur 2009). Broadband access via cable has become more important since Deutsche Telekom sold its cable network in 2003. By the end of 2008, nearly 1.6 million cable broadband connections were in use (Bundesnetzagentur 2009). Among the DSL providers, Deutsche Telekom has a market share of about 51 percent, Deutsche Telekom's resellers have a market share of about 8 percent, and competitors with own infrastructure have a market share of about 37 percent (Bundesnetzagentur 2009). The latter usually have access to Deutsche Telekom's last copper mile at the MDFs. Additionally, some carriers (e.g., NetCologne, Wilhelm.tel) in large German cities provide FTTB. These carriers often use the municipal utilities' ducts and sewers to roll out their own fiber access network.

In 2005, Deutsche Telekom started to roll out fiber to the street cabinets in order to offer VDSL in large German cities. Where this has happened, the traditional street cabinets have been replaced by bigger cabinets that now accommodate the DSLAMs. Depending on the distance between the consumer and the street cabinet, this technology permits a bandwidth of up to 50 MB/sec. So far, the updated street cabinets are connected to the MDF by both fiber and the traditional copper wire. Copper wire is still currently used by Deutsche Telekom, its resellers and its competitors to offer access at a bandwidth of 16 MB/sec. Eventually, however, the copper wire will become obsolete and when its use between the street cabinet and the MDF is phased out, the very survival of Deutsche Telekom's competitors will be in doubt. Therefore, the German regulatory agency, Bundesnetzagentur, aims

to set incentives for more transparency regarding Deutsche Telekom's roll-out plans for the fiber access network (Bundesnetzagentur 2008).

The Bundesnetzagentur did not want to force Deutsche Telekom to allow competitors access to its new fiber access network. However, the European Commission filed an action against Germany, which, in turn, required Bundesnetzagentur to mandate subsidiary access (Möschel 2007; Cullen International 2007), that is, Deutsche Telekom must grant access to its ducts so that competitors can roll out their own fiber to the street cabinet within Deutsche Telekom's ducts. When there is insufficient space in the ducts to make this feasible, Deutsche Telekom is required to grant access to its own unused fiber (dark fiber). At the street cabinets, competitors have access to the copper pairs that connect the customers to the street cabinets. However, a competitor is required to build its own street cabinet and install a DSLAM if space will allow. Deutsche Telekom claims that the mandated subsidiary access to its new fiber network has made it hesitant to roll out additional fiber network.

*France*

At the end of the third quarter 2008, 17.1 million broadband connections existed in France, a rate of 26.9 connections per 100 inhabitants. 16.3 million of these connections were DSL connections; the remainder was split between cable, fiber, wireless and satellite (ARCEP 2008a). 8.2 million DSL connections are provided by competitors of the incumbent operator, France Télécom; 6.0 million of them by way of LLU and 2.2 million using bitstream[1] (ARCEP 2008b). At the end of 2007, DSL was available to 98.2 percent of the population, whereas cable was available to only 40 percent (ARCEP 2008c).

In its deployment of fiber, the French telecommunications market is one of the most competitive in Europe. Many different operators plan to roll out FTTH. This solution, which is more radical than the German step-by-step approach, is also favored by ARCEP, the French regulatory agency. The strategy of deploying FTTH instead of FTTC is based in the relatively long distance between the street cabinet and the consumer in most areas of France. In Germany, the average distance between the consumer and the street cabinet is 300 meters; in France this distance averages 1 km. Therefore, roll out of fiber to the street cabinet would result in a far lower bandwidth in France than in Germany.

France Télécom began a pre-roll-out of FTTH in several large cities in 2007. Mass-market roll out is planned to take place from 2009 to 2012, aiming at 2 million subscribers by 2012 (cf. Elixmann et al. 2008). France Télécom's competitors are especially concentrated in the Paris region, profiting from Paris's unique and ubiquitous sewerage system that provides man-high canals to every house. This system makes the deployment of fiber very easy. Indeed, the carrier Free aims at covering 70 percent of Paris; Neuf Cegetel already reaches 400,000 homes in Paris and plans to reach 5 million by the end of 2012.

To spur investment in FTTH, ARCEP pursues three main strategies. First, France Télécom is required to grant access to its ducts. After surveying France Télécom's duct facilities in 10 cities, ARCEP concluded the ducts are sufficiently roomy that competitors can roll out their fiber in parallel. Using this space dramatically reduces competitors' costs of deploying fiber.

Second, ARCEP does not consider it economically reasonable to duplicate fiber roll out inside a building and thus desires competitors to coordinate on this front. This view is also held by the French parliament, which, in the Law on Modernizing the Economy (n° 2008–776), published 4 August 2008, mandated that new buildings must be equipped with fiber and that the first operator to deploy fiber inside a building must grant access on a non-discriminatory basis (ARCEP 2008d). By contrast, fiber unbundling is not mandated yet and there is no further obligation to provide bitstream access to the fiber network (Elixmann et al. 2008).

Third, municipalities are to play an active role in facilitating the fiber roll out by providing information about existing infrastructure and geographical characteristics, co-ordinating street work and negotiations with building owners, and granting access to their own infrastructure, such as sewer systems.

*United Kingdom*

The British telecommunication market includes 15.6 million broadband connections, of which 14.3 million were residential broadband connections

[1] In the case of bitstream access, the incumbent not only provides the unbundled local loop to the competitor but also transmission services. In comparison to LLU, bitstream access fosters a more service-based competition than facility-based competition.

at the end of 2007 (Ofcom 2008a). This results in a broadband penetration rate of 23.5 connections per 100 inhabitants in the United Kingdom. At the end of 2007, 26.3 percent of broadband connections used DSL from British Telecom; British Telecom's wholesale broadband products accounted for 26.9 percent of the market; 23.7 percent of broadband connections were provided by competitors using the incumbent's last mile; 21.8 percent used broadband over cable; and 1.3 percent had other types of connections (Ofcom 2008a). Due to increased DSL use (from 10 percent in 2006 to 23.7 percent in 2007), made possible by competitors using British Telecom's last mile via LLU, British Telecom suffered a massive decline in its wholesale broadband share, which had peaked at 42.3 percent in 2006 (Ofcom 2008a).

The emergence of facility-based competition based on LLU began in 2006 with the functional separation of British Telecom from its local access network. The local access network is now controlled by Openreach, a functionally separated branch of British Telecom. Openreach was founded to guarantee equal access to the local loop for British Telecom and its competitors. With the unbundling of 33.2 percent of all MDFs at the end of the first quarter 2008, competitors can now deliver LLU-DSL to 82.6 percent of all households (Ofcom 2008a).

Several market participants plan to roll out a NGA. In July 2008, British Telecom announced that it would invest EUR 1.78 billion in the roll out of FTTC for 7–10 million households by 2012 (Ofcom 2008b). FTTC allows a bandwidth of 40 Mbit/s at first. Newly built houses will be equipped with FTTH, which will allow a bandwidth of 100 Mbit/s and more. A first trial is taking place in Ebbsfleet Valley, Kent, where 10,000 new houses will be equipped with FTTH starting in 2008. In December 2007, Virgin Media, the British cable operator and British Telecom's main competitor, announced the upgrade of two-thirds of its cable network. This upgrade enables Virgin Media to offer a bandwidth up to 50 Mbit/s to 9 million households since the end of 2008 (Ofcom 2008a). In addition to British Telecom and Virgin Media, smaller entities, including H2O Networks Ltd and the Digital Region Project, are planning to roll out NGA networks in some areas. H2O Networks Ltd has plans to use the municipal sewerage system.

In a report published in September 2008, the British regulatory agency, Ofcom, elaborated on its vision of the regulatory regime during and after the roll out of NGA networks. Ofcom focuses on regulatory certainty, meaning that Ofcom's decisions will be "clear, timely and consistent over the longer term" (Ofcom 2008b). Ofcom acknowledges that standardized interfaces are very important in providing effective access opportunities for every market participant. Ofcom therefore relies on industry-driven development and supports the formation of industry groups, such as NGN UK or the Network Interoperability Consultative Committee (NICC), to harmonize and support the development of standards. In terms of access, Ofcom remains committed to promoting infrastructural competition at the deepest level possible. Where British Telecom deploys a FTTC network, Ofcom considers it obliged to provide access to the copper wire at the street cabinet. Where British Telecom deploys a FTTH network, Ofcom obligates it to allow fiber or wavelength unbundling or duct access, which means competitors are granted access to British Telecom's ducts so that they can duplicate the FTTH network for their own use. Ofcom is currently making a survey of British Telecom's ducts. In September 2008, the Caio Review (2008) recommended strategies to reduce the cost of deploying fiber, such as the co-ordination of street work and the provision of access to public utility ducts and sewers. Based on these recommendations, Ofcom is considering the use of municipal sewerage systems and is carefully examining the French approach. In addition to these "passive" access strategies, Ofcom is also considering "active" access strategies (e.g., bitstream access).

The pricing of access has yet to be decided. The prices of old access products were regulated by Ofcom, but the new prices will be unregulated, at least to begin with. Ofcom is aware of the risk of setting an inappropriate price and is also cognizant of the uncertainty and risk that the investor in NGA is exposed to and therefore wants the market parties to experiment with different prices. Excessive pricing does not seem likely due to regulation of other wholesale products, such as DSL access, and competition with cable and wireless NGN products.

*Netherlands*

The Dutch market for telecommunication is known for its well-developed broadband access. There are 33.5 broadband connections for every 100 inhabitants. Of the households that are connected to broadband, 60.8 percent chose broadband over DSL, 38 percent chose broadband over cable, and 1.2 percent chose a fiber connection (OPTA 2007). Compe-

tition with cable is especially fierce since 97 percent of Dutch households are covered by a cable-TV network (Kirsch and von Hirschhausen 2008). In 2007, the incumbent Dutch telecommunication carrier, KPN, dominated the market, with an overall broadband market share of 44 percent and a DSL market share greater than 70 percent (OPTA 2007). The remaining DSL providers, e.g., Orange or Tele2, run their own backbone networks and interconnect with KPN at the MDFs.

In November 2005, KPN declared that it will partly replace its copper access network with fiber optics by 2010.[2] According to this plan, fiber optics will either be rolled out to the street cabinets or to homes. This will give KPN a VDSL2 network that can deliver up to 50 MB/sec. As part of the upgrade, KPN intends to phase-out a great many of its 1,361 MDFs, at which competitors have unbundled access to KPN's network. However, the Dutch regulatory agency, OPTA, insists that a fully-fledged alternative be made available to competitors that will lose their interconnection at the MDFs. After considering the imposition of regulatory obligations on KPN, OPTA decided to stimulate a discussion among all market parties. In July 2007, KPN and the three largest MDF access operators (Orange, bbned and Tele2) reached a first memorandum of understanding that has since been accepted by 6 of the 10 market participants (KPN 2008).

Under the memorandum of understanding, KPN has agreed that it will not begin the phase-out of the MDFs currently used by competitors earlier than mid-2010. Afterward, the competitors can choose between the following various options. First, MDF access will continue at 196 MDFs, which will be transformed into so-called mini-MDFs. The cost of access shall remain at the same level as normal MDF access. Second, competitors can extend their own fiber optic networks to the street cabinets. If competitors choose this second option, KPN will guarantee a simultaneous roll out of its own fiber network and will bear the competitors' costs for migrating the unbundled lines from the MDF to the street cabinets. Additionally, KPN will pay a lump-sum compensation for the depreciation of the book value of MDF assets. A third option is that competitors return to providing bitstream access, which implies a step back in terms of infrastructure competition, as competitors would have to purchase more services from the incumbent. Again, the costs for the migration to bitstream access will be borne by KPN, and KPN will also pay a compensation for the competitors' MDF assets.

OPTA acknowledges the efforts in the memorandum of understanding but argues that access at the street cabinet – even though it contributes to infrastructure competition – is not a good alternative for all competitors because it requires economies of scale (OPTA 2008a). Thus, OPTA will require KPN to guarantee bitstream access. In turn, KPN will be allowed to charge access fees that cover its costs and garner a reasonable profit (OPTA 2008a). In the areas where KPN is rolling out FTTH, access at the street cabinets will not be available. In these areas, OPTA wants KPN to grant unbundled access to the fiber optic network, which would be comparable to the old unbundling obligation of the copper cable at the MDF (OPTA 2008a). Further, OPTA is considering founding an industry body, similar to the NGN UK, in which all market participants meet to discuss the future standards of the NGN.

OPTA (2008b) has published a draft decision concerning the price regulation of access to unbundled fiber loops. The pricing regime is designed to protect against margin squeeze, price discrimination and excessive pricing. OPTA plans to impose a price cap calculated by using all-risk weighted average cost of capital. Under this scheme, in addition to the standard cost of capital, a premium based on the risk of the investment, as well as a premium regarding regulatory risk, will be considered (OPTA 2008b).

**Conclusions**

The discussion about regulation of NGAs across European countries basically revolves around three themes: access to NGAs, access to ducts and the phasing out of the traditional copper access network.

Mandating access to NGAs will discourage investment. As long as competitors will incur comparable costs for rolling out a fiber network, competition will ensue, even in the absence of access regulation. Against this background, granting regulatory holidays for NGAs for a given time period is a misplaced step; new infrastructure components along the NGA should be completely free of regulation. However, it is not economically reasonable to duplicate certain

[2] At the end of November 2008, KPN announced that it would take over 41 percent of Reggefiber, an operator of fiber networks in the Netherlands, and spend EUR 6–7 billion over the next five to seven years to roll out FTTH nationwide (cf. Dekker 2008). The joint venture of KPN and Reggefiber has yet to be approved by the Dutch competition commission, NMa.

parts of the NGA. This is most obviously true of fiber roll out inside a building, but also for some regions where duplication of a fiber access network would not be profitable. In these cases, national regulatory agencies should consider mandating competitor access to NGA at a regulated price. This price should include an adequate risk premium for the first-mover investor who bears the risk of uncertain future demand and should compensate for the fact that next-generation facilities can be rolled out at lower cost in the future. Another way of risk sharing is joint investment in NGA by all competitors, which would result in all competitors having access to this joint network at nondiscriminating prices.

Infrastructure competition will only occur if the costs to roll out the NGA are nearly equal for all competitors. Obviously, however, because the incumbent telecommunication carrier already has access to ducts, its costs will be lower than those of its competitors. Leveling the playing field will require symmetric access regulation of all existing ducts, including both those of the incumbent telecommunication carrier and alternative ducts or sewers owned, for example, by municipal utilities. If this symmetric access regulation to ducts guarantees that all competitors will face similar costs of rolling out a fiber network, different strategies for doing so will result, opening the possibility of innovation, instead of simple imitation of the incumbent's roll-out strategy.

The transition to NGA will make the traditional copper access network obsolete. This has serious implications as to the survival of competitors who at present rely on having access to the incumbent's local loop at the MDF. So that these competitors can make feasible plans about their future, it is important to ensure transparency as to the phasing out of the traditional copper access network. This could be achieved by sunset clauses that clearly set forth how long the copper access network will be available. As it is probably too optimistic to rely on a collective agreement between the incumbent telecommunication carrier and its competitors, national regulatory agencies may need to play a role in ensuring that appropriate transparency is achieved.

## References


Anell, P., S. Jay and T. Plückebaum (2007), "Nachfrage nach Internetdiensten – Dienstearten, Verkehrseigenschaften und Quality of Service", *wik Diskussionsbeitrag* 302.

ARCEP (2008a), High Speed Internet Observatory – 3rd Quarter 2008 Provisional Results, http://www.arcep.fr/fileadmin/reprise/observatoire/haut-debit/trim03b-2008/obs-htdebit-t32008-eng.pdf (accessed 15 December 2008).

ARCEP (2008b), Report on DSL High Speed Wholesale Offers Unbundling and Bitstream 1st December 2008, http://www.arcep.fr/fileadmin/reprise/observatoire/blr/decembre-2008/tab-degroupage-011208-eng.pdf (accessed 15 December 2008).

ARCEP (2008c), ARCEP's *Annual Report 2007*, Paris.

ARCEP (2008d), Recommendations on the Implementation of Last Drop Sharing of the Last Part on Optical Fibre Networks, http://www.arcep.fr/uploads/tx_gspublication/recomd-mutual-ftth-1008-eng.pdf (accessed 15 December 2008).

Bundesnetzagentur (2008), *Jahresbericht 2007*, Bonn.

Bundesnetzagentur (2009), *Jahresbericht 2008*, Bonn.

Caio, F. (2008), *The Next Phase of Broadband UK: Action Now for Long Term Competitiveness,* London.

Cullen International (2007), *EU Telecommunications Flash Message* 75/2007.

Dekker, V. (2008), KPN en Reggefiber steken 6 miljard in national glasnet, http://www.trouw.nl/nieuws/economie/article1904419.ece/KPN_en_Reggefiber_steken_6_miljard_in_nationaal_glasnet_.html (accessed 15 December 2008).

Elixmann, D., D. Ilic, K.-H. Neumann and T. Plückebaum (2008), *The Economics of Next Generation Access – Final Report, Study for the European Competitive Telecommunication Association (ECTA),* WIK-Consult, Bad Honnef.

European Parliament (2008), *Report on the Proposal for a Directive of the European Parliament and of the Council Amending Directive 2002/21/EC on a Common Regulatory Framework for Electronic Communications Networks and Services,* Brussels.

Kirsch, F., and C. von Hirschhausen (2008), "Regulation of Next Generation Networks: Structural Separation, Access Regulation, or No Regulation at All?", Communications & Strategies 69, 63–85.

KPN (2008), *Annual Report and Form 20-F 2007,* Den Haag.

Möschel, W. (2007), "Fehlsame Weichenstellung in der TK-Regulierung", *Zeitschrift für Informations-, Telekommunikations- und Medienrecht* 9, 547–49.

Ofcom (2008a), *Communications Market Report,* London.

Ofcom (2008b), *Delivering Super-Fast Broadband in the UK,* London.

OPTA (2007), OPTA *Annual Report and Market Monitor 2007,* Den Haag.

OPTA (2008a), Fixed Telephony, Broadband and Leased Line – Preliminary Draft Decisions, http://www.opta.nl/download/Fixed+Telephony+Broadband+and+Leased+Lines+Preliminary+Draft+Decisions%5Fcontext+and+perspective+15+July+2008%5Fbeveiligd%2Epdf (accessed 15 December 2008).

OPTA (2008b), Draft Policy Rules—Tariff Regulation for Unbundled Fibre Access, http://www.opta.nl/download/draft%5Fpolicyrules%5Ftariffregulation%2Epdf (accessed 15 December 2008).