ECONSTOR
Make Your Publications Visible.

A Service of

ZBW Leibniz-Informationszentrum Wirtschaft
Leibniz Information Centre for Economics

Jensen-Butler, Christopher; Madsen, Bjarne; Caspersen, Soren

Conference Paper

Public expenditure flows and regional disposable income in Denmark

39th Congress of the European Regional Science Association: "Regional Cohesion and Competitiveness in 21st Century Europe", August 23 - 27, 1999, Dublin, Ireland

Provided in Cooperation with:
European Regional Science Association (ERSA)

Suggested Citation: Jensen-Butler, Christopher; Madsen, Bjarne; Caspersen, Soren (1999) : Public expenditure flows and regional disposable income in Denmark, 39th Congress of the European Regional Science Association: "Regional Cohesion and Competitiveness in 21st Century Europe", August 23 - 27, 1999, Dublin, Ireland, European Regional Science Association (ERSA), Louvain-la-Neuve

This Version is available at:
https://hdl.handle.net/10419/114266

Standard-Nutzungsbedingungen:

Die Dokumente auf EconStor dürfen zu eigenen wissenschaftlichen Zwecken und zum Privatgebrauch gespeichert und kopiert werden.

Sie dürfen die Dokumente nicht für öffentliche oder kommerzielle Zwecke vervielfältigen, öffentlich ausstellen, öffentlich zugänglich machen, vertreiben oder anderweitig nutzen.

Sofern die Verfasser die Dokumente unter Open-Content-Lizenzen (insbesondere CC-Lizenzen) zur Verfügung gestellt haben sollten, gelten abweichend von diesen Nutzungsbedingungen die in der dort genannten Lizenz gewährten Nutzungsrechte.

Terms of use:

Documents in EconStor may be saved and copied for your personal and scholarly purposes.

You are not to copy documents for public or commercial purposes, to exhibit the documents publicly, to make them publicly available on the internet, or to distribute or otherwise use the documents in public.

If the documents have been made available under an Open Content Licence (especially Creative Commons Licences), you may exercise further usage rights as specified in the indicated licence.

WWW.ECONSTOR.EU

Mitglied der Leibniz-Gemeinschaft

Public Expenditure flows and regional disposable income in Denmark

Chris Jensen-Butler +
Bjarne Madsen *
Søren Caspersen *

+ Department of Economics, University of St. Andrews, St. Andrews, KY16 9AL, Scotland, UK. tel: + 44 1334 462442, fax: + 44 1334 462444

* Institute of Local Government Studies (AKF), Nyropsgade 37, 1602 Copenhagen V, Denmark tel: + 45 33110300, bm@akf.dk, sc@akf.dk

Paper presented to the 39th ERSA/RSAI Congress, Dublin, August 1999

Rural areas in crisis? The role of the welfare state in income creation, the case of Denmark

1. Introduction

Many west European states are facing the prospect of undertaking substantial changes in welfare state provisions for their citizens. These changes arise from the political goal of limiting growth of public expenditure or even reducing public expenditure in the face of what are perceived to be increasing demands on the welfare state. The implementation of such policies leads to interesting regional economic questions concerning the role of the welfare state in creating regional income growth and interregional income convergence. There is a body of evidence that suggests that welfare states in general create a geographical redistribution of income to the advantage of poorer regions, but little work has been done to estimate the magnitude of these effects. The main weight of earlier studies has been on comparative static analysis and examination of the direct effects of welfare state expenditure.

Rural areas in West European countries have generally lower income levels than more urbanised areas within the same country, and it can be expected that transfer incomes and public consumption play a greater role in income creation in such areas. This paper examines the role of the welfare state in Denmark in income creation in rural areas. Rural areas are grouped into types and the effect of the welfare state on income creation as well as the effects of other income-generating factors in the different types of rural area are examined. The results indicate the need to differentiate between types of area in order to understand the process of income creation in rural areas.

Denmark is a particularly interesting example because of the relative importance of the welfare state in the Danish economy. Both public consumption and transfer incomes are very large, as a percentage of GDP. The development of disposable income in the period 1980-95 in different types of Danish rural area is examined and decomposition techniques are used to assess the relative importance of different components of income creation, including welfare state expenditure and taxation, on changing patterns of disposable income. The present paper takes further an earlier study on the regional economic impact of the Danish welfare state undertaken by Hansen & Jensen-Butler (1996).

Section 2 examines the literature on the regional economic consequences of the welfare state. In section 3 changes in disposable income in Denmark in the period 1980-95, both by region and by type of rural area, in order to set the scene. In this period there has been convergence in levels of disposable income per capita between rural and more urbanised areas in Denmark. In section 4 decomposition analysis is discussed in some depth and the model, LINE, used in the decomposition, is presented. Section 5 outlines the methodology of cumulative decomposition, this being one of the two approaches to decomposition used, seen in relation to LINE. Section 6 describes the second approach used, single component decomposition, again in relation to LINE. The results of both types of decomposition are presented in section 7 which permits evaluation of the effects of both the welfare state and other factors on income creation for rural areas as a whole and also by

type of rural area. Finally, section 8 draws conclusions from the analysis and examines policy prescriptions with respect to income creation in rural areas.

2. The regional economic consequences of the welfare state

There is a growing body of work on the relationship between welfare state expenditure, revenues that finance welfare state expenditure and central regional macroeconomic variables such as gross factor incomes, disposable income and employment.

Most studies examine only the direct effects of the welfare state on regional income and employment levels, though some attempts have been made to include indirect and induced effects, as well as dynamic effects, in a broader macroeconomic framework.

Work on these questions can be loosely grouped under three headings: studies of financial flows between regions; studies of the effects of welfare state expenditure on disposable income; modelling approaches to the regional economic effects of welfare state expenditure.

It should be noted that the definition of what constitutes welfare state expenditure is in itself ambiguous. There is a primary distinction between public sector consumption and transfer incomes, the sizes of which, in relation to GDP vary considerably between different countries. In 1988 income transfers were 27.6% of Danish GDP at factor cost, whilst in the Netherlands this reached 30.9%. In 1987 public consumption constituted 30.1% of GDP at factor cost in Denmark, whilst in Germany the corresponding figure was 22.1% and in the UK 24.4%. In Denmark the education and health sectors would be regarded as a part of the welfare state, as would significant elements of such activities as recreation and culture, which may not be the case in other countries.

2.1 Studies of income creation and the welfare state

Examples of studies of financial flows between regions are for the case of the UK Short (1978, 1984) and for Sweden NUTEK (1994). A general result from these studies is that net flows of welfare state expenditure in per capita terms favour poorer and more peripheral regions when direct effects alone are considered. Whether or not these effects are sufficient to create regional economic convergence over time between regions in a country depends on both changes in welfare state provision and taxation over time in relation to other factors such as the regional distribution of employment and productivity growth. Everything else being equal, it is changes in welfare state provision and taxation, which create changes in disposable income.

The regional direct effects of welfare state expenditure on per capita disposable incomes follow from the conclusions concerning financial flows. A number of authors in different countries have pointed out that interregional flows of social security related expenditure, in quantitative terms by far exceed expenditures related to regional policy. Hence, it is argued, the regional economic effects of (net) social security expenditure are potentially much more substantial than expenditure occurring under regional policy. Thus, policies, which are not explicitly spatial in their conception, may well have more substantial

regional economic impacts than specifically spatial economic policies (Oosterhaven & Stoffelsma 1990, Disney, 1984, Groes, 1994, 1997, Hansen & Jensen-Butler 1996).

Stoffelsma & Oosterhaven (1989) examined the regional distribution of welfare state expenditure in the Netherlands in the period 1979-86 and concluded that social security benefits led to a 40% reduction in the inequality of regional primary incomes per capita in the period. In general, the poorer and more peripheral regions received above average per capita welfare state expenditure, whilst the core regions received lower per capita expenditure. However, there were important anomalies: a core region such as Noord-Holland received above average expenditure per capita, probably explained by the urban problems of the Amsterdam conurbation, whilst a few poorer and peripheral regions, such as Overijssel, had under average per capita expenditure. Their study also undertook a decomposition of welfare state expenditure in order to examine the overall pattern as well as the anomalies. They used a cumulative decomposition technique (discussed below) in order to identify the relative influences of:

1. Regional differences in numbers of recipients per inhabitant in each region, as compared with the national proportion
2. Differences in average benefit per recipient by region as compared with the national level
3. Interaction effects between 1) and 2)

They also analysed the regional economic effects of different welfare state programmes, further decomposing 2) into:

4. The relative contribution of high and low benefit per recipient programmes in each region
5. The contribution of high or low benefit levels within each programme in each region
6. Interaction between 5) and 6)

They conclude that: *'The core regions have less benefit recipients per capita and a lower average benefit per recipient than the Netherlands as a whole. The peripheral regions, on the other hand, have relatively more recipients and higher benefit levels than the national average. The intermediate regions show a more diverse pattern'* (p. 239). Decomposition techniques are the central methodology used in the present study. However, their 1989 study of income generation involved only welfare state related expenditures.

Oosterhaven & Stoffelsma (1990) undertook an analysis of interregional net financial flows in the Netherlands, examining both revenue and expenditure flows, documenting that the seven Dutch provinces which had a net inflow of public expenditure in the period 1979-86 received net expenditure amounting to 1.1% of Dutch GNP. These provinces were all poorer and more peripheral. The major net contributor was Zuid-Holland, a core region, whilst the other three net contributors were in regional economic terms less clearly core. They conclude that these net flows reduce differences in per capita incomes between the richest and poorest regions by up to 24%. The study of net flows reinforces the conclusions from the study of expenditures alone. Hansen & Jensen-Butler (1996) document similar core to periphery flows of net expenditure in Denmark, using data from the Local Authorities' Research Institute (AKF). They then go on to examine the role of social security payments in income creation at municipal level in the Danish peripheral region of West Lolland, showing clearly the growing share of social security payments in

disposable income in the region during a period of economic crisis, whilst in Denmark as a whole and also in Greater Copenhagen, this share was stable.

In addition to the work of Hansen & Jensen-Butler, a number of Danish studies have examined public expenditure flows and the role of the welfare state in regional income creation. One of the first studies of the regional economic effects of changes in taxation and public expenditure was undertaken in connection with a general economic reform of the welfare state proposed by the then conservative-liberal government in 1989 (Madsen 1989). The results showed that the effects on regional disposable income per inhabitant were positive for Greater Copenhagen whilst they were negative in the more peripheral regions in Denmark. The main reason for this pattern was that a principal element in the reform was a reduction in average levels of income tax, a change that favoured the richer regions. Reductions in public expenditure and increases in user payments and specific elements of taxation, such as environmental taxes, did not exhibit major regional variation. Methodologically, the study was a straightforward analysis of the spatial impact of taxation and expenditure changes at regional level, using the national-regional economic database of AKF.

This was followed by a number of studies of the consequences of taxation and public expenditure for regional disposable income in Danish regions. A study of flows of revenue and expenditure for the peripheral island of Bornholm (Madsen et al 1991) demonstrated that there was a considerable net financial inflow to the island through the public sector, despite the fact that tourism is an important element in the island economy. Also, at the same time an incipient independence movement for the island was claiming that the island was *de facto* economically independent of Denmark and therefore could opt to join a Baltic community instead. The study revealed that this was not the case. A more general study of interregional financial flows in the public sector for the 16 Danish regions followed (Nørskov 1992). This revealed the same general pattern, namely that the richest regions (principally Greater Copenhagen) had a net deficit in relation to public finances whilst poorer regions had a net surplus. Another study, undertaken at the level of municipalities (275 in all) provided results which exhibited the same pattern at a lower level of spatial disaggregation (Hansen 1991).

2.2 Beyond the direct effects

There are four main problems associated with these studies. First, the derived effects (indirect and induced) of the public sector financial flows are not examined. Second, the dynamic effects of changes in welfare state provision working through their effects on factor supply and prices are not included. Third, the studies tend to mix the problems of identification of the absolute magnitude of financial flows in the space economy (and changes in other key variables, such as population and employment) with the question of the extent to which the flows contribute to regional income convergence or divergence. Fourth, the studies are generally cross-sectional, providing a static picture at one point of time.

Two recent Danish studies have attempted to remedy these deficiencies. Dam et al (1997) have undertaken an analysis of the regional economic effects of a reduction in welfare state related expenditure and changes in taxation in Denmark which includes the derived and dynamic effects on the regional and local economy. Madsen & Caspersen

(1998) and Expertudvalget (1998) have analysed changes in disposable income per inhabitant in the period 1980-95 for Danish regions and municipalities.

The study by Dam et al (1997) attempted to get beyond identification of the direct effects of changes in welfare state expenditure, drawing in both derived and dynamic effects of such changes. The basis of the study was a national level forecast of central macroeconomic variables, derived from the national macroeconomic model ADAM built by Statistics Denmark (Dam 1996). This model was used to create a forecast for 2010 by extrapolating existing trends. The forecast was then used as a baseline to examine the regional and local economic effects of two scenarios involving changes in welfare state expenditure for the year 2010. The macroeconomic model LINE (described below) was utilised to model these regional and local economic effects. The first scenario involved a reduction of current welfare state expenditure of DKr 20 billion (3 billion ECU) in the period 1997-2000. This was divided into a reduction of DKr 6 billion in government final demand, involving in turn a reduction of the public sector labour force by 20,000 and a reduction in government transfers of DKr 14 billion, or about 7%, spread evenly over the four year period. The second scenario involved the same expenditure reduction, accompanied by a corresponding reduction in taxation of DKr 20 billion.

The initial or direct effects of a reduction in transfers on disposable income can be seen in figure 1**.** The hardest hit areas are the most peripheral and the poorest: the southern islands of Lolland-Falster, Northern Jutland, remoter parts of eastern Jutland, some of the smaller islands, South-West Jutland and North-West Zealand. The areas least affected are the richer Copenhagen suburbs and its periphery as well as the manufacturing areas in central and western Jutland. In the 1970s and 1980s Denmark experienced substantial relocation of manufacturing employment from Greater Copenhagen and to a lesser extent other cities, to rural areas in Jutland, where agriculture was and is still relatively important (Maskell, 1986, Jensen-Butler, 1992)

However, when the full derived and dynamic effects of reductions in welfare state expenditures are included, as shown in relation to changes in disposable income in figure 2, then it is clear that the rural areas are not, in general, affected negatively. The hardest hit areas are the larger cities, both provincial cities and Copenhagen as well as some very peripheral areas. Again, the richer suburbs of Greater Copenhagen perform relatively well. This pattern reflects the distribution of manufacturing and service activity and indicates that the simple idea that peripheral areas will be hardest hit by reductions in welfare state expenditure must be treated with caution when derived and dynamic effects are taken into account. In particular, industrial exports seem to benefit from reductions in public expenditure. Reduction in public sector employment increases unemployment and lowers wages through labour market reactions. This cost reduction improves competitiveness in foreign export markets. Growing exports create expansion of economic activity in manufacturing industries, which is to the advantage of industrial areas, which in Denmark are in part at least rural and peripheral. Spillover effects will have a positive influence on the economies of the more urbanised regions.

The studies by Madsen & Caspersen(1998) and Ekspertudvalget (1998) of changes in disposable income by municipality leads directly into the present study and introduce the issues of ex ante and ex post analysis.

2.3 Ex ante and ex post approaches

Model based analysis of the role of the welfare state in income creation by region, as exemplified above, is often *ex ante* in its approach, providing answers to *what-if* questions, embodied in scenarios. Such questions can address changes in financial flows between regions, the direct effects of changes in welfare state expenditure on disposable income or analyses of direct, indirect, induced and dynamic effects.

Figure 1 Disposable income 2010, initial effects of a transfer reduction, change with respect to baseline.

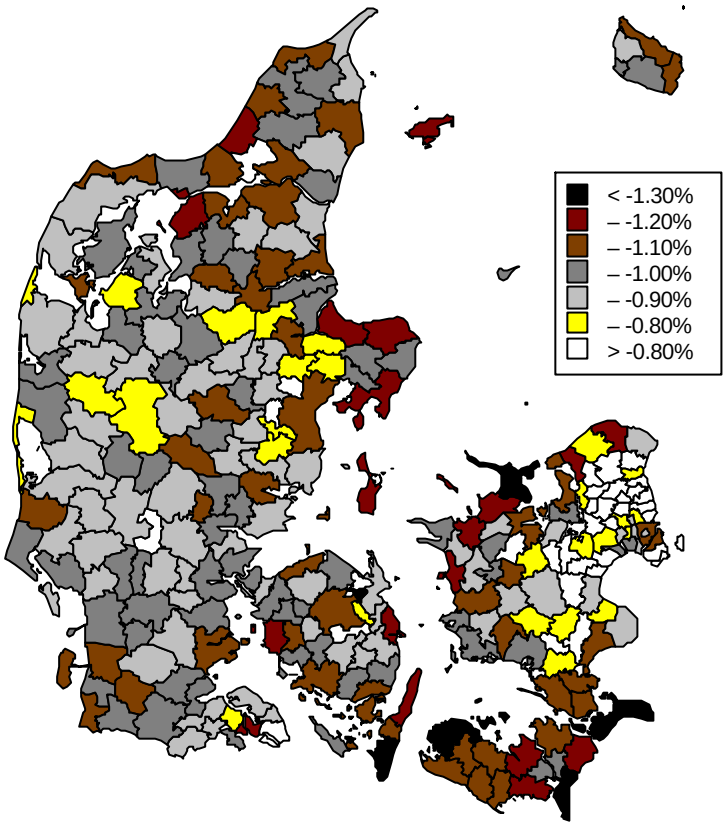

Figure 2. Disposable income 2010 Scenario 1.

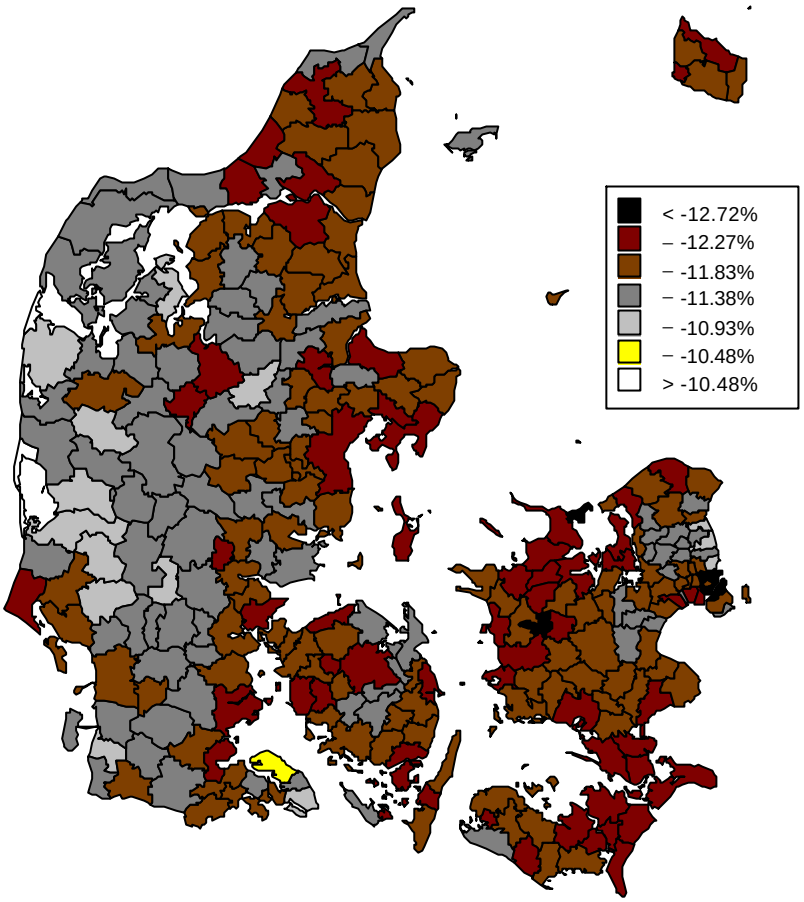

An alternative modelling approach is *ex post*, where historical data can be used to identify the relative contributions of different causal variables in income creation. Time series econometric analysis is a standard tool and increasingly, decomposition techniques are being used to undertake ex post analysis of changes in disposable income over a period where data exist for one year at the beginning and one at the end of the period. Both approaches require specification of an underlying explanatory model. The present study utilises decomposition techniques based on a regional economic model. The real role of the welfare state in process of regional economic convergence, which has taken place in Denmark during the last 20 years, is examined. The lessons of history can be used to forecast future local economic development and to assess the role of welfare state in this process. Using different decomposition techniques and a local economic model for Danish municipalities, it is possible, in a time perspective, to separate out the role of the welfare state in regional and local income creation.

3. Setting the scene: Changes in disposable income by region in Denmark 1980-95

Trends in income growth in Danish municipalities are first outlined for the period 1980-95. More specifically, changes in disposable income for rural municipalities are examined and for this purpose a classification of rural municipalities is presented. This permits examination of patterns and causes of income change in different types of rural area.

Regional welfare levels are measured using disposable income per inhabitant, which is calculated in the following manner:

$$ydibg = ylorbg + yaobg + tbg - sbg - ysfrbg \quad (1)$$

where:
ydibg:disposable income, persons with qualification level g and place of residence b
ylorbg: earned income
yaobg: other income (dividends, royalties, interest etc)
tbg: income transfers
sbg: personal taxation
ysfrbg: interest payments

ydibg is then easily transformed to per inhabitant values, ydibgq.

Figure 3 shows the distribution of disposable income per inhabitant in all of Denmark's 275 municipalities in 1995. The figure shows that disposable income is highest in Greater Copenhagen and in the major cities as well as municipalities with a high level of industrial activity. In the peripheral areas, the larger islands and in West Lolland (the extreme southwestern part of the island south of Zealand where Copenhagen is located), disposable income is especially low. Figure 4 shows growth in disposable income 1980-95 in current prices and it can be seen that rural areas in Jutland have in many cases experienced above average growth in disposable income, whilst the cities, Greater Copenhagen, Århus, Odense and Ålborg, have experienced below average income growth.

For rural areas the pattern is as shown in table 1, where the classification of rural municipalities can also be seen. For the 109 rural municipalities as a whole,

Figure 3. Disposable income per inhabitant by residence 1995, current prices.

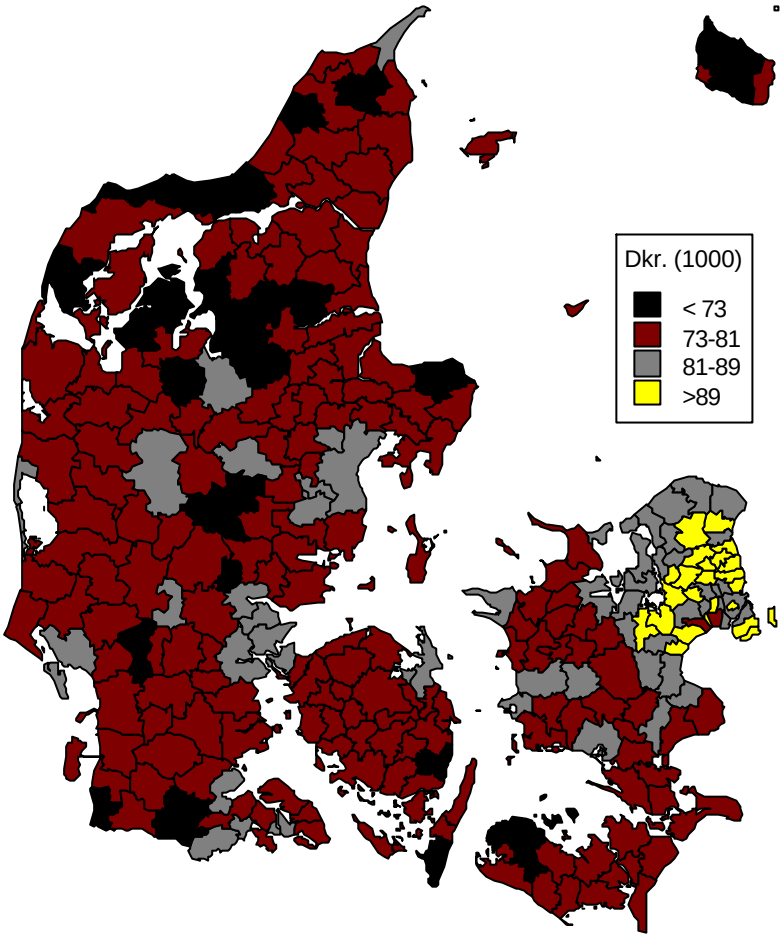

residence in current prices

Figure 4: Average annual growth in disposable income 1980-95, by place of

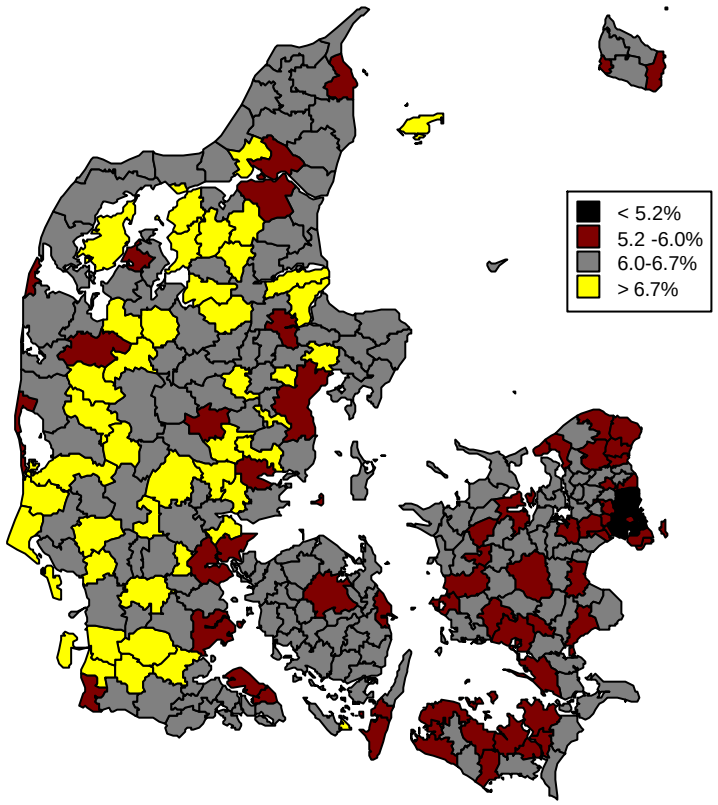

National average: 5.98%

Table 1. Disposable income per inhabitant by place of residence for different groups of rural municipalities in 1995, current prices.

	DKr Per Capita				Percentage	
	1980	1995	Absolute growth	Absolute difference in growth	Growth per year	Difference in Growth rate
Rural mun.	29163	75847	46684	-1087	6.58	0.60
Agricultural mun. (2)	29086	75886	46800	-971	6.60	0.62
Agricultural mun. (4)	28222	74093	45871	-1900	6.65	0.67
Fishing mun.	31713	77332	45619	-2152	6.12	0.14
Vulnerable mun.:						
- lowest	28696	73816	45120	-2651	6.50	0.52
- middle	28832	73987	45155	-2616	6.48	0.44
- highest	29992	76271	46279	-1492	6.42	0.44
Peripheral mun.	29251	74790	45539	-2232	6.46	0.48
Large islands	29739	75050	45311	-2460	6.37	0.39
West Lolland	31686	74196	42510	-5261	5.84	-0.14
Bornholm	30305	74238	44930	-2838	6.25	0.27
Denmark	34368	82139	47771	0	5.98	0.00

disposable income in 1995 lies about 10% under national average (column 2). Rural municipalities are defined as municipalities where the largest town has less than 3.000 inhabitants. For agricultural municipalities, defined as having at least twice the national share of income arising from agriculture, disposable income is a little more than 10% under national average. Agricultural municipalities are further classified into two groups, one having twice as large a share and the other four times as large a share of income from agriculture, respectively, as compared with the national average. For fishing municipalities, disposable income is higher, but still 5% under national average.

Some rural municipalities have been defined as economically vulnerable using a number of indicators, including unemployment, demographic decline and small tax base. These municipalities have been further subdivided into three subgroups with different degrees of vulnerability. The most vulnerable have a level of disposable income 12% under national average whilst the least vulnerable are 9% under. A further group is defined as peripheral, having a weak urban centre located at a considerable distance to a strong urban centre. These have a disposable income 11% under the national average.

Finally, three specific groups of contiguous peripheral municipalities have been defined, these three groups being highly peripheral with a weak urban centre, forming in each case a sub-region. These are Bornholm, the larger islands, and West Lolland. It should be noted that in general, (except for these three last groups with respect to each other), the groups of rural municipalities are not mutually exclusive.

Table 1 also shows that in terms of income growth, rural municipalities have been performing better than Denmark as a whole (6.58% pa as compared with 5.98%). Furthermore, as the final column shows, all classes of rural municipalities have been performing better than the national average, except for one of the three highly peripheral groups, West Lolland. Both Bornholm and the large islands perform less strongly, though still better than the national average. The more vulnerable rural municipalities have also performed less strongly, as have fishing municipalities, though their level of disposable income was higher in 1980.

4. Decomposition of income growth in Danish rural municipalities

In the most general sense, economic models are used to decompose growth into components explained by causal variables. Decomposition is a form of ex-post analysis that involves an underlying theoretical model, requiring data for two points of time, both for the dependent and independent variables, in this case 1980 and 1995. The model is applied in steps and the contribution of the causal variables entered at each step to changes in the dependent variable are assessed. A number of problems arise from different approaches to decomposition which are discussed below and the methodological choices that have been made in the present study are examined.

Decomposition techniques have been used extensively in regional economics. Reviews and applications have been provided by Wolff (1985), Dietzenbacher (1997) and Andersen (1998). The best-known decomposition technique in regional economics is shift-share analysis, where growth is decomposed into a national component, a structural

component and a residual or regional component. A well-developed tradition for decomposition is to be found in input-output modelling (Rose & Casler, 1996). Here the principal and most simple division into components is between changes in total demand, final demand and intermediate consumption. (For a Danish example of decomposition of energy consumption using national input-output models, see Wier, 1998 and for a decomposition of regional income growth see Madsen et al., 1997).

In the following section general principles concerning decomposition are discussed. In section 4.2 the model underlying the decomposition analysis is presented.

4.1 General principles

Decomposition can, in principle, be undertaken in two different ways. Cumulative decomposition involves the successive inclusion of the effects of different components, starting with the first set of factors, then adding the second set to explain the residual arising from application of the first set, followed by application of a third set of factors to explain the residual arising from the application of the second set and so on. In principle, total growth is explained after application of the last set of explanatory factors and the model reproduces the growth pattern at the end of the period. Cumulative decomposition faces the basic problem that the magnitude of the effects of the individual elements is affected by the order in which the factors are applied. This is because the difference between the 1980 and 1995 level of any one factor may influence the calculation of the effects of succeeding factors.

In order to avoid the problem of order, decomposition can be undertaken as a set of isolated, or single component, calculations, where the exogenous variables are given their 1995 values and the calculations are performed on the 1980 values for each step, starting at the beginning each time. One set of changes therefore does not affect calculation of any other set of changes. The disadvantage of this method is that the sum of the isolated components of the decomposition will not necessarily (and not usually) be equal the total growth in the variable in question, here disposable income. It is difficult to interpret the positive or negative residual appearing from this type of analysis. In this study both types of decomposition have been applied and a major divergence between the two would be a cause for concern.

The two approaches can be described at a general level as follows, using variables to explain changes in disposable income that can be classified into two broad groups:

-Exogenous market-related variables, E^m
-Exogenous non-market related variables, E^{nm}

Cumulative decomposition can be expressed as follows:

$$\begin{aligned}\Delta \text{ydibgq} &= \left[M(E^m_{t1}, E^{nm}_{t1}) + (\text{model error } t1)\right] - \left[M(E^m_{t0}, E^{nm}_{t0}) + (\text{model error } t0)\right] \\ &= \left[M(E^m_{t1}, E^{nm}_{t1}) - M(E^m_{t0}, E^{nm}_{t1})\right] + \left[M(E^m_{t0}, E^{nm}_{t1}) - M(E^n_{t0}, E^{nm}_{t0})\right] \quad \ldots\ldots\ldots\ldots\ldots\ldots (2)\end{aligned}$$

where:
M: model specified variables
t0 and t1 are points of time at period start and finish, respectively

The first element inside the first square brackets of equation (2) is the market induced change and the second element is the non-market induced change.

Isolated decomposition can be expressed as follows:

$$\Delta ydibgq = \left[M(E^{m}_{t1}, E^{nm}_{t1}) - M(E^{m}_{t0}, E^{nm}_{t1}) \right] \ldots\ldots\ldots\ldots\ldots\ldots (3a)$$

$$\Delta ydibgq = \left[M(E^{m}_{t1}, E^{nm}_{t1}) - M(E^{m}_{t1}, E^{nm}_{t0}) \right] \ldots\ldots\ldots\ldots\ldots\ldots (3b)$$

Equation (3a) represents market-induced change and equation (3b) non-market induced change.

The causal model

An underlying causal model should determine the sequence of decomposition in a cumulative decomposition. In some cases (for example, shift-share analysis) the decomposition sequence represents an underlying theoretical hierarchy of causality. In other cases, the sequence reflects the structure of the economic model lying behind. For example, the Keynesian demand-driven model will start with demand which generates production, whilst a supply side growth model will start with factors of production which are used to generate income. In the present study LINE is a Keynesian demand-driven model, which starts with production, which generates income, which in turn generates demand. In an isolated decomposition the model determines which causal variables are included, but their sequence of inclusion is without significance.

A further consideration is whether to use a single or multiple equation model. Other things being equal, a multiple equation model is a model in structural form, whilst a single equation model can be regarded as a many equation model in reduced form. In the present study a multiple equation model (LINE) has been used. The Danish regional research tradition has typically employed single equation models, (see for example Groes & Heinesen, 1997 and Kristensen & Henry 1998, who use a two-equation model). A general discussion of the advantages of using models in structural form is provided by Lucas (1976). In the case of Danish regional models, Madsen & Jensen-Butler (1999) argue for a formulation in structural form rather than reduced form multiplier models.

Model error

The actual growth can be decomposed in the following manner:

$$y^{a}_{1995} - y^{a}_{1980} = y^{a}_{1995} - y^{m}_{1995} + (y^{m}_{1995} - y^{m}_{1980}) + (y^{m}_{1980} - y^{a}_{1980})$$

where: y is income, a is actual and m is model

= model error 1995 + model calculated growth 1980/95 + model error 1980

As can be seen from the expression, before decomposition can be carried out, a model calculation has to be made for 1980 and 1995, in order to exclude model error from

the analysis. In the case of LINE, because of the simple linear structure of the model, the model error is zero.

Forward or backward

Decomposition can, in principle, be undertaken forwards or backwards in time. In this study, as in the previous section, a forward procedure has been used, starting in 1980.

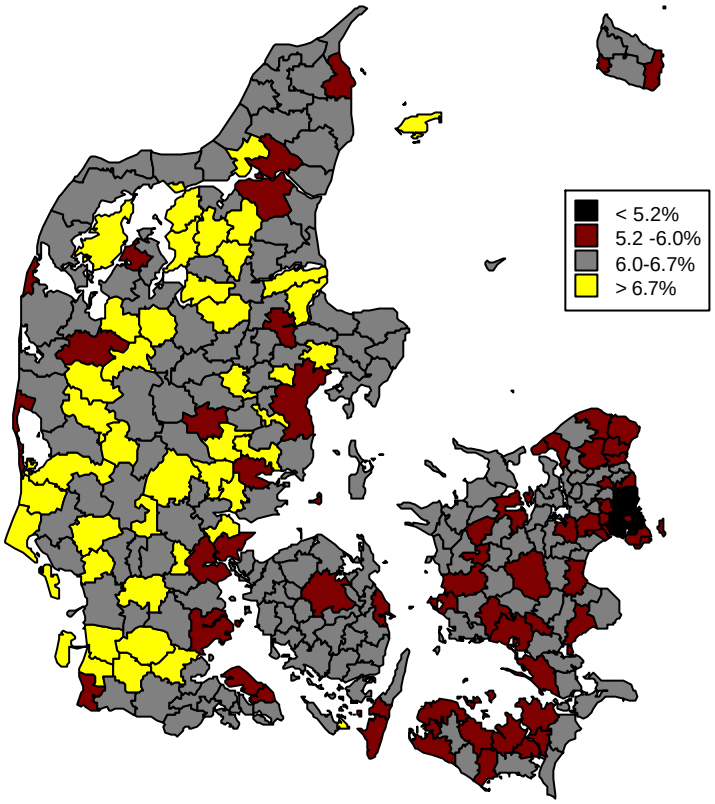

National average: 5.98%

Figure 5: The structure of LINE

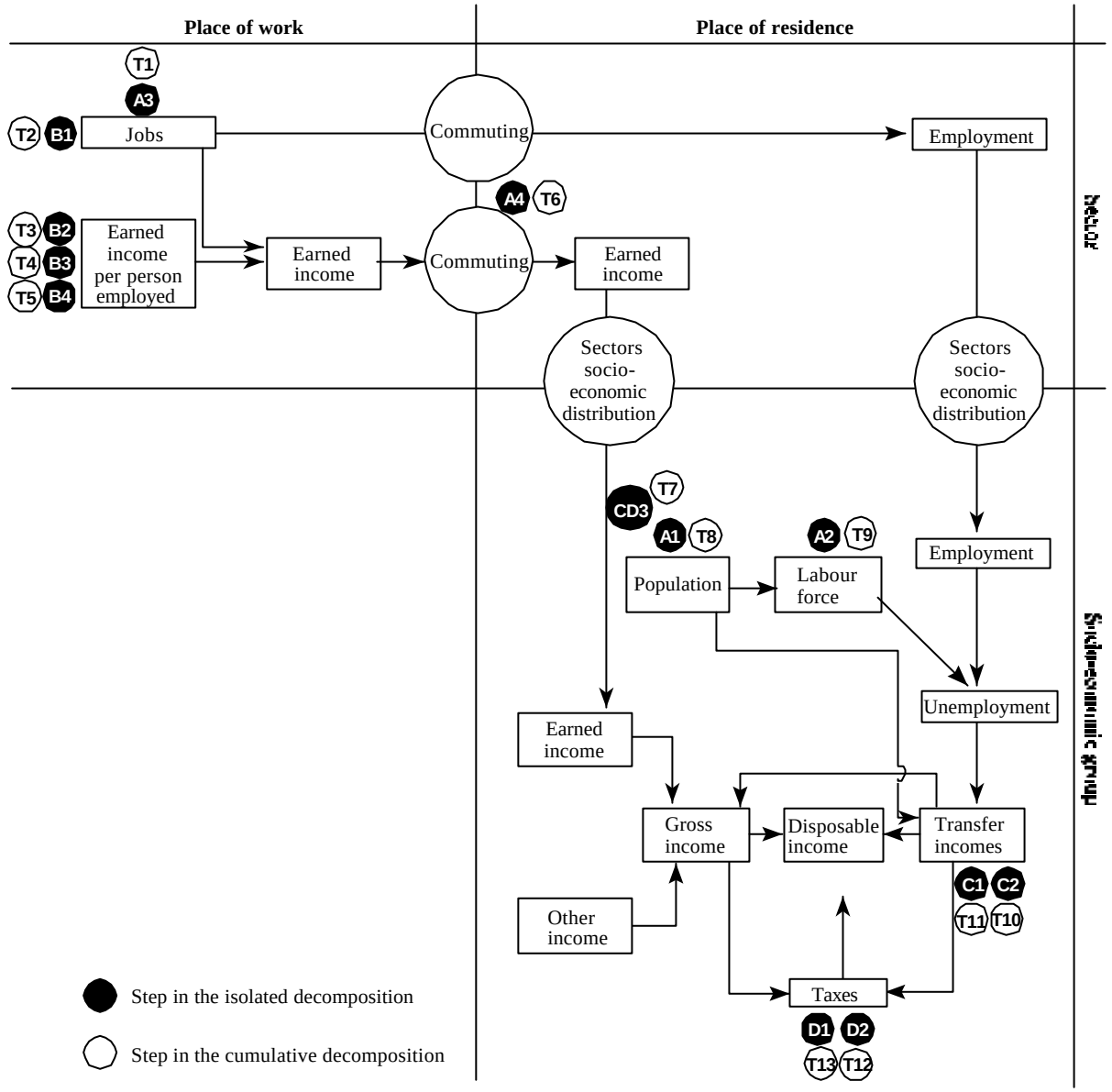

4.2 LINE - a model for the Danish local economy

Given the pattern of income growth in table 1, the next task is to identify the different components of change, which can be used to explain the pattern of income growth. A simple version of the LINE model has been used to decompose growth in disposable income for the period 1980-95 for different types of rural area in Denmark. The structure of LINE is shown in figure 5. This shows that economic activity is determined in the municipality where the labour force is employed, where earned income is calculated on the basis of the number of places of employment in the municipality and earned income per employed person in each sector.

After this, earned income and employment is allocated to the municipality of residence using a commuting model. In the next step earned income and employment by sector are calculated by socio-economic group based on qualification. Given the total labour force and the calculated employment, unemployment can be determined. Income transfers are calculated using demographic information and social security data covering such elements as unemployment and numbers of social security recipients. Taxation is calculated using incomes. Finally, disposable income is calculated by adding earned income, other income and income transfers and substracting taxes paid and interest payments (see equation 1). In figure 5 the location in the model where changes are made in order to estimate the individual factor's contribution to income growth are indicated, both for the isolated and the cumulative decomposition.

In the following, the model relations are described in some detail. This version of LINE contains no behavioural equations, only input-output type relations and institutionally determined relations.

The starting point for LINE is the number of jobs in each municipality. For each of the 12 sectors in the model, earned income is calculated by multiplying the number of jobs with the average earned income per person employed. For all municipalities and sectors earned income by place of employment is calculated as follows:

$$ylorae = YLORAEQ \; \mathbf{A} \; qae \quad .....(4)$$

where:

ylorae: earned income by municipality of employment a and sector e

YLORAEQ: earned income per person employed by municipality of employment and sector

qae: number of jobs by municipality of employment and sector

Earned income and employment is distributed to municipality of residence using a simple commuting model:

$$qbe = \sum_a QABEQ \cdot qae \quad .....(5)$$

$$ylorbe = \sum_e YLORABEQ \cdot ylorae \quad .....(6)$$

where:

qbe: employment in municipality of residence b and sector e

QABEQ*:* employment in municipality of residence b as a share of the number of jobs in municipality of employment a, for sector e

ylorbe: earned income in municipality of residence band sector e

YLORABEQ*:* earned income in municipality of residence b as share of earned income in municipality of employment a, for sector e

Earned income and employment is then transformed from sector to socio-economic group by qualification. There are 7 qualification groups (g) and for each the following calculation is made:

$$qbg = \sum_a QBEGQ \cdot qbe \quad \ldots\ldots\ldots\ldots (7)$$

$$ylorbg = \sum_a YLORBGEQ \cdot ylorbe \quad \ldots\ldots\ldots\ldots (8)$$

where:
qbg: employment for persons in socio-economic group g in municipality of residence b
QBGEQ: employment for persons in socio-economic group g as a share of total employment, for sector e and municipality of residence b
ylorbg: earned income for persons in socio-economic group g in municipality of residence b
YLORBGEQ: earned income for persons in socio-economic group g as a share of total earned income for sector e and municipality of residence b

The supply of labour depends on the number of persons in the age group 18-59 years and the activity rate:

$$usbg = USBGQ \ \mathbf{A} \ u1859bg \quad \ldots\ldots\ldots\ldots (9)$$

where:
usbg: labour force for people in socio-economic group g and municipality of residence b
USBGQ: labour force as a share of the total number of 18-59 year old persons, for socio-economic group g and municipality of residence b
u1859bg: population between 18 and 59 years in socio-economic group g and municipality of residence b

On this basis unemployment is calculated:

$$ulbg = usbg - qbg \quad \ldots\ldots\ldots\ldots (10)$$

where:
ulbg: number of unemployed in socio-economic group g in municipality of residence b

In the following steps disposable income is calculated as shown in equation (1). The general model for the group of *other income* (defined by a number of types of other income) is as follows:

$$y<type>bg = Y<TYPE>BGQ \ \mathbf{A} \ ubg \quad \ldots\ldots\ldots\ldots (11)$$

where:
y<type>bg: other income by type for persons in socio-economic group g and municipality of residence b
Y<TYPE>BGQ: other income by type per person in socio-economic group g and municipality of residence b
ubg: total population in socio-economic group g in municipality of residence b.

Income transfers consist of a number of different types, for example unemployment support, pensions of different types, housing subsidies, income support, child allowance, educational grants and early retirment subsidies. Two types of equation are used to calculate income transfers:

t<type>bg = T<TYPE>BGQ **A** UT<TYPE>BGQ **A** u<alder>bg.....(12)

t<type>bg = T<TYPE>BGQ **A** **A** u<alder>bg.....(13)

where:

t<type>bg: income transfers by type for persons in socio-economic group g and municipality of residence b

T<TYPE>BGQ: income transfers by type per recipient (equation (12)) or per person (equation (13)) for persons in socio-economic group g by municipality of residence b

UT<TYPE>BGQ: persons who receive income transfers as a share of the number of persons in the relevant age group, for socio-economic group g and municipality of residence b

u<alder>bg: number of persons in the relevant age group in socio-economic group g by municipality of residence b.

In general, equation type (12) is preferred, though the choice of equation is determined by data availability.

Personal taxation consists of a number of different types of taxation for persons in socio-economic group g and municipality of residence b. In general, tax is calculated using taxable income multiplied by a rate of taxation:

s<type>bg = S<TYPE>BGQ **A** yti<type>bg.....(14)

where:

s<type>bg: tax payments by type of tax for persons in socio-economic group g and municipality of residence b

S<TYPE>BGQ: tax rate for type of tax for persons in socio-economic group g and municipality of residence b

yti<type>bg: taxable income by type of tax for persons in socio-economic group g and municipality of residence b

Taxable income is composed of different elements of income and tax deductions and is calculated as follows:

yti<type>bg = y<type>bg - yf<type>bg.....(15)

where:

y<type>bg: sum of taxable income for type of tax for persons in socio-economic group g and municipality of residence b

yf<type>bg: sum of before-tax deductions for the tax type in question for persons in socio-economic group g and municipality of residence b

In general, before-tax deductions for each type of tax are determined as follows:

yf<subtype>bg = YF<SUBTYPE>BGQ **A** ubg.....(16)

where:

yf<subtype>bg: before-tax sub-type of deduction for each type of tax for persons in socio-economic group g and municipality of residence b

YF<SUBTYPE>BGQ : before-tax sub-type of deduction for each type of tax for persons in socio-economic group g and municipality of residence b

5. Cumulative decomposition using the simple version of LINE

Decomposition of the growth of disposible income per inhabitant using LINE involves a model circuit from income calculated by place of production and sector through commuting to income calculated by place of residence and socio-economic group and onward through taxes and income transfers to disposible income, as shown in figure 5. In technical terms the cumulative decomposition is performed by sucessively setting LINE's exogenous variables equal to 1995 values in order to calculate the consequences for earned income and disposible income of these changes. For example, the effects of setting the tax rates for 1980 equal to the 1995 values can be calculated. In the following, decomposition is outlined in 13 steps.

Step 0

Before the decomposition begins 1980 prices are converted to 1995 prices. Productivity is raised by the national deflator for GDP at factor prices *(pyf* = 1.9312 for 1980-95). Other nominal variables in LINE are raised by consumer price index *(pcp* = 1.9146 for the same period).

Step 1 (T1 in figure 5)

In the first real step employment in the first year is scaled so that it is the same as in the last year. This gives a municipality distribution effect:

$$qae_{start} = qae_{start} \cdot \frac{qa_{fin}}{qa_{start}} \quad \ldots\ldots\ldots\ldots (17)$$

where:

qae_{start} : employment in of place of work (municipality) a and sector e for the first year

qa_{fin} : employment by place of work (municipality) for all sectors for the final year

qa_{start} : employment by place of work (municipality) for all sectors for the first year

Step 2 (T2)

In the second step employment by place of work and sector in the first year is replaced by the value for the final year, which allows estimation of the marginal effect of developments in industrial structure:

$$qae^{start} = qae^{fin} \quad \ldots\ldots\ldots (18)$$

Step 3 (T3)

In the third step the effect of price changes in each sector is estimated. Productivity in 1980 is multiplied by the national sector-specific deflators borrowed from ADAM:

$$YLORAEQ'_{start} = YLORAEQ_{start} \cdot \frac{pyf_e}{pyf} \quad \ldots\ldots\ldots (19)$$

where:

pyf_e: the national sector specific deflator for GDP at factor prices for sector e

YLORAEQ': earned income per person employed, by place of production a and by sector e, corrected for national sectoral changes in GDP at factor cost.

Step 4 (T4)

In step 4 the effect of the real growth in productivity in each sector is estimated. Productivity in 1980 is multiplied by the national sector-specific deflators borrowed from ADAM and the national real growth in productivity:

$$YLORAEQ''_{start} = YLORAEQ'_{start} \cdot \frac{\sum_a YLORAEQ_{fin}'}{\sum_a YLORAEQ_{start}'} \ldots\ldots\ldots (20)$$

where:

YLORAEQ": earned income per person employed, by place of production a and by sector e, corrected for national sectoral changes in GDP at factor cost and for real labour productivity growth.

Step 5 (T5)

In this step earned income in the first year is replaced with earned income in the final year. In this way the residual in relation to steps 3 and 4 is obtained:

$$YLORAEQ_{start} = YLORAEQ_{fin} \ldots\ldots\ldots (21)$$

Step 6 (T6)

Here the effects of changed commuting patterns on the local economy is calculated by replacing the 1980 with the 1995 commuting matrix:

$$QBAEQ_{start} = QBAEQ_{fin} \ldots\ldots\ldots\ldots\ldots (22)$$

$$YLORBAEQ_{start} = YLORBAEQ_{fin} \ldots\ldots\ldots\ldots\ldots (23)$$

Step 7 (T7)

In this step the effects of a changed distribution of socio-economic groups by sector is estimated by replacing the distribution by socio-economic group in the first year with that of the final year:

$$QBGEQ_{start} = QBGEQ_{fin} \ldots\ldots\ldots\ldots\ldots\ldots (24)$$

$$YLORBGEQ_{start} = YLORBGEQ_{fin} \ldots\ldots\ldots\ldots\ldots (25)$$

Step 8 (T8)

In step 8 population by age group in the final year replace the same values for the first year. In this way the effects of a changed population are assessed:

$$u0017b_{start} = u0017b_{fin} \quad u1825b_{start} = u1825b_{fin}$$

$$u2659b_{start} = u2659b_{fin} \quad u6066b_{start} = u6066b_{fin}$$

$$u6700b_{start} = u6700b_{fin} \ldots\ldots\ldots\ldots\ldots\ldots (26)$$

where:

$u0017b_{start/fin}$ is the number of persons between 0 and 17 years residing in municipality b in the start or finish year

$u001825b_{start/fin}$ is the number of persons between 18 and 25 years residing in municipality b in the start or finish year and so on by age group.

Step 9 (T9)

In step 9 the activity rate of the labour force in the first year is replaced with that of the final year. Here the effects of a changed activity rate are estimated:

$$USBGQ_{start} = USBGQ_{fin} \ldots\ldots\ldots\ldots(27)$$

Step 10 (T10)

In the tenth step the age dependent socio-economic composition and share of transfer income recipients in each recipient group for the final year are used to calculate the effects of transfer incomes:

$$U0017BGQ_{start} \Leftarrow U0017BGQ_{fin} \ldots\ldots\ldots\ldots(28)$$
$$U1825BGQ_{start} \Leftarrow U001825BGQ_{fin} \ldots\ldots\ldots\ldots(29)$$

where:

$U0017BGQ_{start/fin}$: Share of 0-17 years-olds with qualification g in municipality of residence b in either start or finish year receiving unemployment insurance.

$U1825BGQ_{start/fin}$: Share of 0-17 years-olds with qualification g in municipality of residence b in either start or finish year receiving unemployment insurance

There are a further 15 categories of recipients of transfer incomes, some age dependent, other not, including recipients of different types of pension (see Madsen et al, 1997 for a detailed description)

Step 11 (T11)

In this step the rates for transfer incomes for the final year are entered:

$$TAUBGQ_{start} \Leftarrow TAUBGQ_{fin} \ldots\ldots\ldots\ldots(30)$$
$$TDPBGQ_{start} \Leftarrow TDPBGQ_{fin} \ldots\ldots\ldots\ldots(31)$$

where:

$TAUBGQ_{start/fin}$: rate for unemployment insurance in municipality of residence b, with qualification g in either start or finish year.

$TDPBGQ_{start/fin}$: part-time pension level per recipient in municipality of residence b, with qualification g in either start or finish year.

There are a further 9 categories of rates for transfer incomes (see Madsen et al, 1997 for a detailed description)

Step 12 (T12)

In this step all tax variables for the final year are entered, except for tax rates:

$$YLORBGQ_{start} \Leftarrow YLORBGQ_{fin} \ldots\ldots\ldots\ldots(32)$$
$$YLOSBGQ_{start} \Leftarrow YLOSBGQ_{fin} \ldots\ldots\ldots\ldots(33)$$

where:

$YLORBGQ_{start/fin}$: coefficient linking the labour and income registers

$YLOSBGQ_{start/fin}$: share of earned income in total income for persons in qualification group g and municipality of residence b in either start or finish year.

There are a further 24 categories of income which constitute the structure of taxable income. (See Madsen et al, 1997 for a detailed description).

Step 13 (T13)

In this step the tax rates are replaced:

$$S12BGQ_{start} \Leftarrow S12BGQ_{fin} \ldots\ldots\ldots\ldots\ldots\ldots\ldots(34)$$

where:

$S12BGQ_{start/fin}$: income tax paid at the 12% rate as a share of personal income in municipality of residence b for qualification group g in either start or finish year.

A further 10 categories of tax rates are used. (See Madsen et al, 1997 for a detailed description).

6. Isolated or single component decomposition using LINE

In section 5 the methodology used in the cumulative decomposition is presented. In the single component decomposition, which is dealt with in this section, the individual steps are treated separately, setting the exogenous variables from the other steps equal to the 1980 value. In the analysis of economic development by municipality using isolated or single component decomposition, four groups of factors are identified.

Step A. Changes in number of jobs and population

The municipalities have experienced changes in numbers of jobs and the size and composition of the population. Estimation is made of the extent to which these changes have contributed to changes in earned income and disposable income per inhabitant.

Step B. Changes in earned income per person employed

Changes in earned income per person employed, calculated by place of work, has consequences for growth in disposible income per inhabitant accounted for by place of residence. A more even distribution of earned income per inhabitant will create conditions for convergence in levels of disposible income. Changes in earned income per inhabitant can either be the result of an unfavourable development in industrial structure in the municipality or a high growth in earned income per employee in the municipality as compared with the rest of the country. Changes in primary income per employed person are in turn the results of sectorally dependent differences in growth in productivity, changes in sectoral terms of trade and a locally determined development of productivity.

Step C. Changes in transfer incomes

A third contribution to a positive development in disposible income per inhabitant could arise from changes in transfer incomes. Here changes in income transfers per person and changes in the share of the population receiving income transfers are examined. For example, average income transfers per recipient may have grown more rapidly than in the rest of the country. Only changes not related to automatic adjustments to unemployment levels are included. Automatic adjustments of transfer incomes to changes in employment and unemployment are included under A and B.

Step D. Changes in taxation

A fourth element in explanation of income convergence could be changes in taxation. If taxation levels in a municipality have been decreasing relatively, average disposible income will increase. Again, only non-automatic changes in taxation are included.

All four groups of factors can contribute to explanation of the development of disposible income. In order to estimate the contribution of each of these factors to income level convergence, the isolated decomposition model is used to estimate the consequences of changes in these factors on disposable income (and earned income) per inhabitant in the period 1980-95.

The calculations are undertaken for all four groups of explanatory variables. These four groups are again subdivided into 13 elements, corresponding to the 13 steps in the cumulative decomposition. An overview over the 13 steps in the decomposition is to be found in table 2. The first column shows the 13 elements of the decomposition. For each element is indicated which variable or variables are equated with the 1995 values and the number of the equation where the change can be observed. In the first row of the table the different results from the model calculations

Table 2. Overview of sequence of calculations in LINE in the isolated decomposition

Model variables: Changes:	Population size and composition (residence)	Labour force activity rate	Jobs (place of work)	Earned income /employed (place of work)	Commuting coefficients	Employment (place of residence)	Sectors' socio-econ distbtn. (residence)	Unemploy-ment (residence)	Earned income (residence)	Transfers and taxes:rates (residence)	Disposable inc-ome/inhabitant (residence)
A Jobs and population											
A1 Population size and composition. Uxxxxbg is changed in equation(9), (11, (12) and (13)	Changes 1980=1995	Constant	Constant	Constant	Constant	Constant	Constant	Endogeous	Constant	Constant	Endogenous
A2 Labour force acivity rate USBGQ changed in equation (9)	Constant	Changes 1980=1995	Constant	Constant	Constant	Constant	Constant	Endogenous	Constant	Constant	Endogeous
A3 Local employment change qae changed in equation (4)	Constant	Constant	Changes 1980=1995	Constant	Constant	Endogenous	Constant	Endogeous	Endogenous	Constant	Endogeous
A4 Commuting QABEQ and YLORABEQ Changed in equation (7) and (8)	Constant	Constant	Constant	Constant	Changes 1980=1995	Endogenous	Constant	Endogeous	Endogenous	Constant	Endogenous
B Earned income per employed person											
B1 Industrial strcuture qae changed in equation (4)	Constant	Constant	Changes 1980=1995	Constant	Constant	Endogenous	Constant	Endogenous	Endogeous	Constant	Endogeous
B2 National GDP deflator YLORAEQ changed in equation (4)	Constant	Constant	Constant	Changes 1980=1995	Constant	Constant	Constant	Constant	Endogeous	Constant	Endogeous
B3 National growth in earned income/employed person YLORAEQ changed in equation (4)	Constant	Constant	Constant	Changes 1980=1995	Constant	Constant	Constant	Constant	Endogenous	Constant	Endogenous
B4 Resuidual (local earned	Constant	Constant	Constant	Changes	Constant	Constant	Constant	Constant	Endogenous	Constant	Endogenous

income/ employed person B2-B3) YLORAEQ changed in equation (4)				1980=1995							

Table 2 (continued)

Model variables: Changes:	Population size and composition (residence)	Labour force activity rate	Jobs (place of work)	Earned income /employed (place of work)	Commuting coefficients	Employment (place of residence)	Sectors' socio-econ distbtn. (residence)	Unemploy-ment (residence)	Earned income (residence)	Transfers and taxes:rates (residence)	Disposable inc-ome/inhabitant (residence)
C Income transfers											
C1 Rates T<TYPE>BGQ changed in equation (12) and (13)	Constant	Constant	Constant	Constant	Constant	Constant	Constant	Constant	Constant	Changes 1980=1995	Endogenous
C2 Structure UT<TYPE>BGQ changed in equation (12) and (13)	Constant	Constant	Constant	Constant	Constant	Constant	Constant	Constant	Constant	Changes 1980=1995	Endogenous
D Taxation											
D1 Tax levels S<TYPE>BGQ changed in equation (14)	Constant	Constant	Constant	Constant	Constant	Constant	Constant	Constant	Constant	Changes 1980=1995	Endogeous
D2 Structure Y<TYPE>BGO and YF<TYPE>BGQ changed in equation (11) and (16)	Constant	Constant	Constant	Constant	Constant	Constant	Constant	Constant	Constant	Changes 1980=1995	Endogeous
C3/D3 Sectors' socio-economic composition Changes in equation (7) and (8)	Constant	Constant	Constant	Constant	Constant	Constant	Changes 1980=1995	Endogenous	Constant	Constant	Endogenous

are shown. Inside the body of the table for each element is shown whether the variable in question is changed exogenously, remains constant or is endogenously determined. The location of the step in figure 5 is also shown in the first column of the table.

The calculation of the sectorally dependent changes in earned income per employee (step B2, B3 B4) and the effects of employment changes are performed cumulatively. This cumulative calculation of the effects of development in earned income per person employed is undertaken in steps 3, 4 and 5 in the cumulative decomposition.

7. Results of the decomposition

Both an isolated and a cumulative decomposition were undertaken, providing similar results. In the following section the results of the isolated decomposition analysis are presented. The results from the cumulative decomposition are discussed briefly in section 7.2.

7.1 Results of the isolated decomposition

As noted earlier, in the period 1980-95 there has been a reduction in differences in disposable income between rural areas and the rest of Denmark. Disposable income in Danish rural (and generally more peripheral) areas grew faster than at national level However, for the most peripheral rural areas, growth in disposable income has only been marginally above the national average, whilst for certain problem areas, notably West Lolland, divergence has actually occurred.

In table 3 the results of the isolated decomposition are presented. As can be seen from the table, the individual elements of the decomposition have been grouped into four main categories, corresponding to those identified in section 6:

a) employment and population
b) earned income per person employed
c) income transfers
d) taxation

The vertical dimension of the table shows the four main components referred to above, subdivided by individual elements of the decomposition. The horizontal dimension shows the grouping of rural municipalities described in section 3. The figures in the table show negative or positive growth in relation to the national average, measured in percentage points. The third row in the table shows that rural municipalities have experienced a growth in disposable income that is 8-12% over the national average, considering the entire period. However, some of the problem areas have experienced a weaker income growth than other rural areas and West Lolland has actually experienced decline in relation to the national average.

A: Employment and demographic change

Rural areas have, compared with the rest of Denmark, experienced a positive development, both in employment and population. Changes in population size and composition (A1) have provided a positive contribution to the above-national growth of 1-

2%. This has arisen because of favourable changes in population composition and emigration from the most peripheral areas.

Table 3. Results of the isolated decomposition of growth in disposable income in Danish rural municipalities 1980-95. Deviations from the national average in percentage points by component and by type of municipality

	Rural mun.	Agric. mun. (2)	Agric mun. (4)	Fish-ing mun.	Vulner mun. (low)	Vulner mun. (mid)	Vulner mun. (high)	Periph mun.	Large Islands	West Loll-and	Born-holm	DK= Nat. effect
Disposable income/inhab DKr 1980 (95 prices)	56739	56626	54953	61858	55851	56110	58378	56929	57819	61589	58922	66842
Disposable income/inhab DKr 1995 (95 prices)	75847	75886	74093	77332	73816	73987	76271	74790	75050	74196	75238	82139
Local growth divergence	11	11	12	2	9	9	8	9	7	-2	5	0(23)
A Jobs and population												
A1 Population size and composition	1	1	1	2	1	1	1	1	1	2	1	0(23)
A2 Labour force activity rate	1	1	1	2	-1	0	2	-1	0	-2	0	0(-2)
A3 Local jobs	1	1	0	1	-2	0	1	-1	-2	-7	-1	0(1)
A4 Commuting	0	0	-1	-1	-1	0	-1	0	0	-1	0	0(0)
B Earned income/ employed person												
B1 Changes in industrial structure	0	0	0	-5	-1	0	-1	-1	-1	0	-3	0(-1)
B2 National GDP deflator	-2	-2	-3	-2	-3	-3	-1	-2	-2	-2	-2	0(7)
B3 National growth in earned income/ employed	6	6	8	6	7	6	2	5	3	1	3	0(15)
B4 Residual (local earned income / employed B2-B3	0	-1	-1	-4	-1	-1	-1	-1	-1	-1	-3	0(0)
C Income transfers												
C1 Rates	1	1	1	0	2	2	2	2	2	3	2	0(7)
C2 Structure	2	2	3	-1	2	1	-1	2	1	0	2	0(7)
D Taxation												
D1 tax levels	0	1	1	1	1	1	0	1	1	1	1	0(-7)

D2 Tax structure	2	2	3	0	3	2	2	2	1	2	1	0(-3)
C3/D3 Sectors' socio-economic distribution	0	0	0	0	0	0	-1	0	0	-1	0	0(1)

Changes in activity rates (A2) have contributed with 1-2% higher real growth in most rural municipalities. The most peripheral areas have, however, experienced declining activity rates, which have contributed negatively to income growth.

A favourable growth in employment in rural municipalities has contributed positively to income growth whilst negative growth in employment (A3) in the most peripheral areas has had the opposite effect. Changes in commuting patterns (A4) have been neutral, or perhaps even marginally negative, for rural areas.

B: Changes in earned income per person employed

Changes in earned income per person employed, which reflect changes in labour productivity, have had substantial effects on growth in disposable income. A more even distribution of earned income per employed person is the primary factor underlying the observed convergence in disposable income, though this varies between different types of rural area. Growth in earned income per employed person has been in net terms positive for most rural areas. Only fishing municipalities and the very peripheral areas have remained neutral or are only marginally positive. The favourable development can both be a result of an improvement in industrial structure in rural areas (B1) and a growth in earned income per employed person inside each sector which is above the national average (B2-B4). The growth in labour productivity (B2-B4) is a result of the difference of differences in sectoral income growth (B3) and changes in terms of trade between sectors (B2) together with the local development (B4). The table shows that changes in sectoral composition are without consequences for income growth (B1). Only fishing municipalities and Bornholm have had losses because of this factor.

Changes in labour productivity have, on the other hand, had a significant effect. The consequences of changes in sectoral terms of trade (B2) are negative for rural areas, which have lost 1-3%. This is due to the fact that agricultural prices have grown slowly. National sectoral growth rates for productivity have contributed positively to income growth (B3), which is due to substantial increases in productivity in agriculture and some industrial sectors (5-7% growth). Only West Lolland and some of the larger islands and Bornholm have had small advantage of this factor, which is due to their specific sectoral composition.

Finally, the residual (B4) is negative for rural areas (-1%). The residual can be interpreted as that part of growth in labour productivity that cannot be attributed to changes in terms of trade or sectoral composition.

C: Changes in income transfers

A third contribution comes from changes in transfer incomes. In this analysis changes in transfer incomes per recipient and changes in share of the population that receives income transfers, are included. Thus, alone changes, which are not associated with automatic adjustments related to unemployment (unemployment support) and demographic changes (pensions), are considered.

Changes in average rates for income transfers (C1) have contributed positively to income growth in rural areas (1-3%). This is mainly because changes in rates for

income transfer have been weaker in high-income areas (such as Greater Copenhagen) and stronger in low-income areas (such as West Lolland).

Table 4: Decomposition of changes in disposable income – cumulative approach

Steps: / Type of rural Municipality	1980 in 80 prices	1980 in 95 prices	Step 1 Local jobs (A3)	Step 2 Industrial structure (B1)	Step 3 Nat. GDP-deflator (B2)	Step 4 Nat Growth Earned Income/ Employee (B3)	Step 5 Residual Local earned income/ employee (B4)	Step 6 Commu-ting (A4)	Step 7 Socio-economic group distbn (C3/D3)	Step 8 Pop size and compo-sition (A1)	Step 9 Labour force activity rate (A2)	Step10 Transfer Incomes: Structure (C2)	Step 11 Transfer incomes: rates (C1)	Step 12 Tax structure (D2)	Step 13 Tax levels (D1)	Differential growth
Rural municipality	29163	56739	0.6%	-0.2%	-1.1%	4.3%	0.8%	0.6%	0.2%	1.7%	1.1%	0.2%	1.8%	1.0%	-0.2%	10.8%
Agricultural mun. (2)	29086	56626	0.6%	0.1%	-1.2%	4.5%	0.2%	0.6%	0.2%	1.3%	1.0%	0.2%	1.7%	1.7%	0.2%	11.1%
Agricultural mun. (4)	28222	54953	-0.0%	0.1%	-1.8%	5.1%	0.1%	0.2%	0.4%	1.7%	0.8%	-0.3%	2.7%	2.5%	0.4%	11.9%
Fishing mun.	32019	61858	0.5%	-4.7%	-2.6%	5.0%	0.3%	0.3%	-0.1%	3.1%	1.9%	-2.2%	0.5%	-0.9%	0.9%	2.1%
Vulnerable mun.:																
– lowest	28696	55851	-1.6%	-0.6%	-2.8%	3.1%	0.3%	0.2%	0.1%	2.9%	-0.3%	0.6%	3.0%	3.4%	1.1%	9.3%
– middle	28832	56110	-0.1%	-0.1%	-1.7%	3.4%	0.9%	-0.2%	0.4%	1.6%	-0.2%	-0.2%	2.6%	2.0%	0.5%	9.0%
– highest	29992	58378	0.6%	-0.5%	-0.4%	2.0%	1.2%	-1.1%	-0.4%	1.5%	2.0%	-0.4%	2.3%	1.5%	-0.8%	7.8%
Peripheral mun.	29251	56929	-1.1%	-0.9%	-2.4%	2.9%	1.2%	-0.1%	0.1%	2.6%	-0.4%	0.6%	3.0%	1.9%	1.1%	8.5%
Large islands	29661	57819	-1.5%	-1.4%	-3.0%	0.8%	1.1%	0.6%	-0.5%	3.4%	0.0%	1.1%	2.7%	2.2%	1.5%	6.9%
West Lolland	31686	61589	-6.6%	-0.3%	-3.0%	-4.4%	-3.1%	2.0%	-0.6%	3.6%	-1.7%	0.3%	3.4%	5.8%	2.2%	-2.4%
Bornholm	30305	58922	-1.2%	-2.6%	-2.7%	1.4%	0.3%	0.0%	-0.5%	3.0%	0.0%	1.5%	1.4%	3.0%	1.1%	4.8%
Denmark	34368	66843	0.0%	0.0%	0.0%	0.0%	0.0%	0.0%	0.0%	0.0%	0.0%	0.0%	0.0%	0.0%	0.0%	0.0%

Changes in the structure of income transfers (C2) (share of persons who receive income transfers in each socio-economic group) have also had positive effects for rural areas (1-3%).

D: Changes in taxation

A fourth element in explanation of income convergence is taxation. Limited increases in taxation levels will be an advantage for rural areas. Again only non-automatic changes in taxation are considered. Changes in taxation levels (D1) have given rural areas a positive contribution (0-1%). Changes in unearned income and the tax structure (D2) have also contributed positively (1-3%)

Conclusions from the isolated decomposition

The positive and convergent development in disposable income per inhabitant in rural areas is strongly related to a favourable development of labour productivity in these areas (B3), whilst a positive growth in numbers employed has only contributed marginally (A3). The positive income growth in rural areas has also developed because of non-automatic changes in income transfers and taxation.

A little more than 50% of the income growth in rural areas can be allocated to market based mechanisms (A and B), whilst a little less than 50% can be allocated to the role of the public sector in rural areas (C and D). In the more vulnerable and peripheral rural areas the public sector plays a more important role in income creation. For the most peripheral areas the non-convergent growth in income is because of a negative growth in employment whilst growth of labour productivity has been around the national average. This negative market-determined development is more than compensated for by a favourable development in income transfers and taxation. However, for West Lolland, the negative effects from decline in employment have not been fully compensated for by the positive effects arising from the public sector, a finding that is in agreement with the work of Hansen & Jensen-Butler (1996).

7.2 Results of the cumulative decomposition

Table 4 shows the results of the cumulative decomposition. In broad terms, the pattern of effects arising from the decomposition of growth in disposable income corresponds to that arising from the isolated decomposition which can be taken as a confirmation of the reliability of the method.

8. Conclusions and consequences for policy

The study has illustrated the importance of differentiation between different types of rural area. Patterns of income growth vary between different types of rural area, as does the contribution of the different causal factors.

It is useful to divide the components of change into two broad groups: those, which are determined primarily by market forces rather than public policy (elements A-B) and those which change more directly because of policy decisions (elements C-D).

8.1 Market forces and the future of rural areas in Denmark

A number of market-based factors will affect the future growth of income in rural areas in Denmark.

A: Employment

Danish industrial production, which is strongly represented in rural areas (Jensen-Butler 1992), will face increasing competition from Eastern Europe. In rural Jutland four sectors are particularly important: clothing and textiles, wood and furniture, food and beverages and metal products. As none of these sectors is especially high-tech or knowledge intensive then growing competition is clearly a threat to number of jobs (Engelstoft & Jensen-Butler 1997). Already in the textile and clothing sector much routine production has already moved to countries such as Poland and the Herning area in Jutland is attempting to retain the high value added components of production.

B: Productivity

It seems probable that the favourable development of real productivity in rural areas will continue in the future, this being an important component in regional income convergence. Industrial and agricultural productivity has grown rapidly since 1980 and will probably continue to do so. On the other hand, it seems likely that prices will continue to rise slowly for agricultural and some Danish industrial products that will have negative consequences for income growth.

The industrial structure of most - but not all - rural areas will probably remain sound. This structure in terms of sectors is traditional, with a strong representation of industries such as food and beverages, wood and furniture, textiles and clothing as well as some metal products. Process rather than product innovation has characterised much industrial growth in rural and peripheral areas in Denmark. However if the vision of a transformation of the Danish economy to a competitive, knowledge-based and high-tech economy is realised (Erhvervsministeriet 1997) then it is clear that the industrial structure of rural areas in Denmark will be less favourable than it is today.

The three specific types of peripheral area, West Lolland, Bornholm and some of the larger islands do face problems of industrial structure, which will probably continue to exist. These are the true peripheral and poorer regions in Denmark.

Finally, there is an unexplained and negative residual pertaining to local economic conditions. This at present has a limited role in income development, but could change in the future.

8.2 Policy and income growth in rural areas in Denmark

The potential for policy to influence the above market-based components is limited. Local and regional industrial development policy does exist in rural areas in Denmark and many central actors in economies of rural areas feel the need to transform their industrial structure more in the direction of knowledge-based production (Engelstoft & Jensen-Butler 1997, Jensen et al 1997). However, resources devoted to this type of policy are limited and their efficacy doubtful. Furthermore, these areas do not in general have the conditions that promote the growth and development of positive externalities related to knowledge and information. They also lack highly qualified labour.

C and D: Public finances and policy

A number of the components of income growth do, however, fall more directly into the policy sphere.

An important element of social policy is related to distributional questions. Unemployment support in Denmark is, in principle, at a level of 90% of former wage or salary. However, there is also a ceiling in terms of absolute levels of support. This means that unemployed persons who formerly had a high income receive compensation which proportionally less than those who had a lower income. The reasons for this are to be found in national-level policy concerning income redistribution. One effect of this policy is that low-income areas gain disproportionately from the existence of the ceiling. In a sense, regional income policy is being conducted through national policy concerning unemployment insurance, social security and income distribution. National level policy concerning distribution will continue to dominate regional policy considerations. On the other hand, a policy option to compensate for these automatic effects could be to reduce block grants to rural areas.

A second policy component is changes in the system of public finance, which transfers income between the state and municipalities, functioning as regional policy. There is an in-built bias in this system to support poorer municipalities. As regional income convergence seems to be occurring in Denmark then political pressures may build to reduce or even eliminate this redistribution effect. In which case, peripheral regions will be especially hard hit.

Bibliography

Andersen AK (1998) *Decomposition of the change in the annual commuting in Denmark 1980-95* (AKF Forlag, Denmark)

Bernard AB, Jones CI (1996) productivity across industries and countries: Time series theory and evidence *Review of Economics and Statistics* 78, 1, 135-146

Dam PU (ed.) (1996) *ADAM - En model af dansk økonomi, marts 1995*, Danmarks Statistik, Copenhagen

Dam PU, Madsen B, Jensen T, Groes N (1997) *Modelling national and local economic consequences of changes in the Danish welfare system* (Paper presented to the 28th Conference of the British and Irish Section of the Regional Science Association International, Falmouth UK, September 1997)

Dietzenbacher E (1997) *An intercountry decomposition of output growth in EC countries* (Paper presented at the 44th North American Meeting of Regional Science Association International, Buffalo, November 6-9, 1997)

Disney R (1984) The regional impact of unemployment insurance in the United Kingdom *Oxford Bulletin of Economics and Statistics* 46 (3) 244-54

Ekspertudvalget (1998) *Markedskræfter og politisk styring* (Ekspertudvalget nedsat af Regeringens Hovedstadsudvalg)

Engelstoft S, Jensen-Butler CN (1997) *Industrial dynamics in two Danish regions* (Manuscript, Department of Geography, University of Copenhagen)

Erhvervsministeriet (1996) *Erhvervsredegørelse* (Erhvervsministeriet, Copenhagen)

Fothergill S, Gudgin G (1982) *Unequal growth: Urban and regional employment change in the UK* (Heinemann, London)

Groes N (1994) *Uligheder i Danmark* (Memo, AKF-Forlaget, Copenhagen)

Groes N (1997) *Inequalities and mobility in the Danish welfare state* In: Peschel K (ed) *Regional growth and regional policy within the framework of European integration* (Physica-Verlag, Heidelberg) 142-175

Groes N, Heinesen E (1997) *Uligheder i Danmark - noget om geografiske vækstmønstre* (AKF-Forlaget, Copenhagen)

Hansen AC (1991) *Den geografiske omfordeling* (AKF Forlag, København)

Hansen F, Jensen-Butler CN (1996) Economic crisis and the regional and local effects of the welfare state: The case of Denmark. *Regional Studies* vol 30,2 167-187

Jensen-Butler, C.N. (1992). Rural Industrialization in Denmark and the Role of Public Policy, *Urban Studies*, vol. 29, no. 6, 881-904.

Jensen TP, Maskell P, Arnberg S, Hansen MB, Ranis T (1997) *Erhvervslokalisering og vækst* (AKF Forlag, Copenhagen)

Kristensen K, Henry (1998) *Lokaløkonomisk vækst i Danmark - en rumlig analyse* (AKF-Forlaget, Copenhagen)

Lucas RE Jr (1976) *Econometric policy evaluation:A critique* In:Brunner K, Meltzer AH(eds)*The Philips curve and labour markets*(Amsterdam North-Holland)14-46

Madsen B (1989) Planens regionale virkninger *AKF-Nyt 1989/2*, Copenhagen

Madsen B (1991a) *Rapport om EMIL-modellen* (AKF Forlag, Copenhagen)

Madsen B (1991b) *Rapport om AIDA-modellen* (AKF Forlag, Copenhagen)

Madsen B Rasmussen L E (1991) *Offentlige betalinger mellem Bornholm og det øvrige Danmark* (AKF-Forlaget, Copenhagen)

Madsen B, Caspersen (1998) *Økonomien i landkommunerne - status og udvikling* (AKF-Forlaget, Copenhagen)

Madsen B, Jensen-Butler CN (1999) The commodity balance and make and use approaches to interregional modelling. Forthcoming: *Economic Systems Research*, June 1999

Madsen B, Jensen-Butler CN, Dam PU (1997) *The LINE model* (Working Paper, Local Governments' Research Institute, AKF, Copenhagen)

Maskell P (1986) *Industriens flugt fra storbyen. Årsager og konsekvenser.* (Nyt Nordisk Forlag, Arnold Busck, Copenhagen)

NUTEK(1994) *Statsbudgetens regionale fördelning* (Swedish Board for Industrial and Technical Development B, 1994:3), Stockholm.

Nørskov L (1988) *Offentlige og mellem-regionale pengestrømme i Danmark i 1988* (AKF Forlag, København)

Oosterhaven J, Stoffelsema RJ (1990) *The net effect of social security on the Dutch interregional income distribution* In: Anselin L, Madden M, *New directions in regional analysis* (Belhaven Press, London) 236-252

Rose A, Casler S (1996) Input-output structural decomposition analysis: A critical appraisal. *Economic Systems Research* 8, 33-62

Short J (1978) The regional distribution of public expenditure in Great Britain 1969/70-1973/74 *Regional Studies* 12, 499-510

Short J (1984) Public finance and devolution - Money flows between government and regions in the United Kingdom *Scottish Journal of Political Economy* vol 31, no 2, 114-130

Stoffelsma RJ, Oosterhaven J (1989) Social security benefits and interregional income inequalities.The case of the Netherlands. *Annals of Regional Science* 23:223-240

Wier M (1998) Sources of change in emissions from energy: A structural decomposition *Economic Systems Research* vol 10 no 2, 99-112

Wolff EN (1985) Industrial composition, interindustry effects and the US productivity slowdown *Review of Economics and Statistics* 67, 2, 268-277.