ECONSTOR
Make Your Publications Visible.

A Service of
ZBW
Leibniz-Informationszentrum Wirtschaft
Leibniz Information Centre for Economics

Böhringer, Christoph; Rivers, Nicholas; Yonezawa, Hidemichi

Working Paper

Vertical Fiscal Externalities and the Environment

CESifo Working Paper, No. 5076

Provided in Cooperation with:
Ifo Institute – Leibniz Institute for Economic Research at the University of Munich

Suggested Citation: Böhringer, Christoph; Rivers, Nicholas; Yonezawa, Hidemichi (2014) : Vertical Fiscal Externalities and the Environment, CESifo Working Paper, No. 5076, Center for Economic Studies and ifo Institute (CESifo), Munich

This Version is available at:
https://hdl.handle.net/10419/105123

Standard-Nutzungsbedingungen:

Die Dokumente auf EconStor dürfen zu eigenen wissenschaftlichen Zwecken und zum Privatgebrauch gespeichert und kopiert werden.

Sie dürfen die Dokumente nicht für öffentliche oder kommerzielle Zwecke vervielfältigen, öffentlich ausstellen, öffentlich zugänglich machen, vertreiben oder anderweitig nutzen.

Sofern die Verfasser die Dokumente unter Open-Content-Lizenzen (insbesondere CC-Lizenzen) zur Verfügung gestellt haben sollten, gelten abweichend von diesen Nutzungsbedingungen die in der dort genannten Lizenz gewährten Nutzungsrechte.

Terms of use:

Documents in EconStor may be saved and copied for your personal and scholarly purposes.

You are not to copy documents for public or commercial purposes, to exhibit the documents publicly, to make them publicly available on the internet, or to distribute or otherwise use the documents in public.

If the documents have been made available under an Open Content Licence (especially Creative Commons Licences), you may exercise further usage rights as specified in the indicated licence.

WWW.ECONSTOR.EU

Mitglied der Leibniz-Gemeinschaft

The international platform of Ludwig-Maximilians University's Center for Economic Studies and the Ifo Institute

CESifo Working Papers

www.cesifo.org/wp

Vertical Fiscal Externalities and the Environment

Christoph Böhringer
Nicholas Rivers
Hidemichi Yonezawa

CESIFO WORKING PAPER NO. 5076
CATEGORY 10: ENERGY AND CLIMATE ECONOMICS
NOVEMBER 2014

An electronic version of the paper may be downloaded
- *from the SSRN website: www.SSRN.com*
- *from the RePEc website: www.RePEc.org*
- *from the CESifo website: www.CESifo-group.org/wp*

CESifo
Center for Economic Studies & Ifo Institute

CESifo *Working Paper No. 5076*

Vertical Fiscal Externalities and the Environment

Abstract

We show that imposition of a state-level environmental tax in a federation crowds out preexisting federal taxes. We explain how this vertical fiscal externality can lead unilateral state-level environmental policy to generate a welfare gain in the implementing state, at the expense of other states. Using a computable general equilibrium model of the Canadian federation, we show that vertical fiscal externalities can be the major determinant of the welfare change following environmental policy implementation by a state government. Our numerical simulations indicate that - as a consequence of vertical fiscal externalities - state governments can reduce greenhouse gas emissions by over 20 percent without any net cost to themselves.

JEL-Code: C680, H700, Q400.

Keywords: fiscal externality, climate policy, federalism, computable general equilibrium.

Christoph Böhringer
Department of Economics
University of Oldenburg
Oldenburg / Germany
boehringer@uni-oldenburg.de

Nicholas Rivers
Graduate School of Public and International Affairs & Institute of the Environment / University of Ottawa
Ottawa / Ontario / Canada
nrivers@uottawa.ca

Hidemichi Yonezawa
Institute of the Environment
University of Ottawa
Ottawa / Ontario / Canada
hyonezaw@uottawa.ca

November 2014
We acknowledge support from and cooperation with Tom Rutherford, Randy Wigle, and Environment Canada in developing the model which is used for the analysis. Böhringer is grateful for support from Stiftung Mercator (ZentraClim). Rivers acknowledges support from the Social Science and Humanities Research Council Canada Research Chairs program. All authors acknowledge support from Carbon Management Canada. The ideas expressed here are those of the authors who remain solely responsible for errors and omissions.

1 Introduction

Classic models of fiscal federalism offer guidance for dividing government's responsibilities between federal and state levels. Notably, the federal government is generally considered best-suited for providing pure public goods that cross state boundaries, which is the case for climate change mitigation and other transboundary environmental problems (Oates, 1999, 2001). National implementation helps to avoid a potential 'race to the bottom' that could occur with state implementation, since each state faces an incentive to weaken environmental policies to attract mobile factors of production from other states.

In practice, however, sub-national governments have been active in implementing climate change policies, especially during the last decade (Rabe, 2008; Lutsey and Sperling, 2008; Williams, 2011). State implementation of climate policies raises the possibility of vertical fiscal externalities.[1] Vertical fiscal externalities in a non-environmental context have received attention - among others - from Keen and Kotsogiannis (2002); Brülhart and Jametti (2006); Dahlby and Wilson (2003); Esteller-Moré and Solé-Ollé (2001); Devereux et al. (2007).[2] To date, however, analysis of vertical fiscal externalities in an environmental context is missing.

Vertical fiscal externalities arise due to the shared tax bases of state and federal governments, where a new tax by a state government has implications for revenue raised by the federal government. A stylized example conveys the basic economic intuition. Consider a federation made up of a large number of states. Each state consists of a single household endowed with a unit of labour, which it supplies inelastically to the representative firm in the region. A federal government imposes a tax at a uniform rate on the income of all households in the country. A representative firm in each state transforms labour inputs into a homogeneous final good, which is traded between states. The firm also releases emissions as a joint output of production. Emissions are initially untaxed. Consider now the application of a tax on emissions by a single state government, the proceeds of which are returned to the state's household as a lump sum transfer. Because of the assumption that there is a large number of states, the implementing state can be considered a

[1] We interchangeably use the terms state, province, and region to refer to a sub-national government.
[2] For a summary of the the early literature see Keen (1998).

price taker on the goods market. The incidence of the emissions tax therefore falls entirely on the wage rate in the implementing state. The lower wage results in a shrinking of the federal tax base, and a reduction in federal tax revenues at the initial federal tax rate. To maintain balance in the federal budget, the federal tax rate must increase. Given the large number of states in the stylized example, the increase in the federal tax rate can be treated as infinitesimal at the state level, with no effect on disposable income in the implementing state. The burden of the new environmental tax in one state of the federation is then entirely shifted to other states, as a result of the new state tax crowding out the federal tax in the implementing state. This economic spillover effect is referred to as a vertical fiscal externality providing scope for net economic gains to the tax implementing state.[3] The more nuanced model we use in the paper for empirical analysis relaxes many of the strong assumptions in this stylized example, but retains the concurrent federal and state taxation that can lead to vertical fiscal externalities.

There are two basic conditions for the creation of vertical fiscal externalities. First, there needs to be joint occupation of tax bases by the federal and state governments. As noted in Keen (1998), a vertical fiscal externality does not require formal concurrency (i.e., federal and state governments occupying the same statutory tax base) since even when the statutory tax bases are different, the economic incidence of federal and state taxes can overlap. Second, the federal government cannot respond to a new state-level tax by changing revenue or expenditure decisions in a way that discriminates against that state. As a matter of fact, considerations of fairness and political economy generally induce federal governments to impose similar tax rates throughout states in a federation and to divorce expenditure decisions from sources of revenue.

As for other taxes and policies, vertical fiscal externalities can have important implications for environmental policy, and these - to our best knowledge - have not been explored in the literature. In this paper, we use a computable general equilibrium (CGE) model to investigate the importance of vertical fiscal interactions in a climate policy setting. The CGE approach is a useful complement to standard econometric techniques for exploring issues related to fiscal externalities used by Esteller-Moré and Solé-Ollé (2001); Devereux et al. (2007); Hayashi and Boadway (2001); Brülhart and

[3] In contrast, horizontal externalities occur as a result of interaction between states in setting taxes, such as tax base competition.

Jametti (2006) and others, since it allows us to skirt thorny identification issues and explore a policy domain where previous policy implementation is limited. Our CGE model is based on empirical data for Canada, and divides the country into 10 states. Canada is typical of many federations, in that a significant proportion of environmental policy-setting occurs at the state (province) level.

We decompose the general equilibrium welfare change associated with introduction of a carbon tax in one state in a country into a domestic market effect, a terms of trade effect, and a vertical fiscal externality effect. We show that the vertical fiscal externality is a quantitatively important component of the welfare change associated with introduction of an environmental tax by a state in a federation. Indeed, in the scenarios we examine, the vertical fiscal externality effect dominates the other effects, implying that a state can fully pass on the economic cost of environmental regulation to other states in the federation. Our results thus show that - even absent any quantification of environmental benefits - the typical state in a federation can benefit when implementing a new environmental regulation, since costs are passed on to other states via the federal government fiscal closure rule.

Aside from the literature on vertical fiscal externalities, the paper is related to a number of other strands of economic research. First, there is the literature on environmental federalism, summarized by Oates (2001). Most of this literature examines interjurisdictional competition for mobile factors, sometimes referred to as the *race to the bottom*. Recent papers examining interjurisdictional competition and environmental regulation in federations include Kunce and Shogren (2005), Konisky (2007), and Levinson (2003). Williams (2011) compares incentive-based to command-and-control regulations in a federation, and finds that under incentive-based regulations, states are able to offload some cost by increasing regulatory stringency. Second, there is the literature on interactions between environmental policies set by multiple levels of government. For example, Böhringer and Rosendahl (2010) examine the interaction between the EU-wide emission trading system and Member State support schemes for renewable electricity production; in a similar vein Roth (2012) examines interactions between federal and state-level transport regulations. Third, our paper is closely related to the literature on environmental policy design in a second-best setting (see Goulder et al. (1999) for a review).

The paper proceeds as follows. In the following section, we develop a simple partial equilibrium model to convey the reasoning behind the results that we produce with the numerical model later in the paper. In section 3, we describe the numerical model that we use to conduct model simulations. In section 4, we explain how we decompose the results from the numerical model to generate additional insight. In section 5, we provide results from the numerical model, and in section 6, we conclude.

2 Partial equilibrium model

We present a theoretical partial equilibrium model to provide guidance to the numerical findings that we produce with our numerical general equilibrium analysis.

Assume that there are N identical states in the federation, indexed by $r = 1 \ldots N$. Consider the market for a good in state r, which for simplicity is characterized by linear demand and supply functions. Inverse demand and supply functions are given by $p_d(q) = \epsilon_d q + q_A(\epsilon_s - \epsilon_d)$ and $p_s = \epsilon_s q$, where the equilibrium in the absence of taxes is achieved at the point $A(q_A, p_A)$, as shown in Figure 1, and where $\epsilon_s > 0$ and $\epsilon_d < 0$ denote the slopes of the supply and demand functions.[4] State index r is omitted to reduce notational burden. A pre-existing federal ad valorem tax t^f causes a wedge between the producer and consumer prices, which we denote as p_B and $p_C = p_B(1 + t^f)$, respectively.

The federal tax is associated with two sources of welfare loss in each state. First, the deadweight loss associated with the federal tax in state r is given by the area of the triangle (ABC) in Figure 1:

$$DWL_r(t^f) = \frac{(\epsilon_s - \epsilon_d)(p_A t^f)^2}{2\left((1 + t^f)\epsilon_s - \epsilon_d\right)^2}.$$

Second, the federal tax generates revenue for the federal government, which is a transfer of funds out of the state (we describe our assumption for federal government expenditure shortly).

[4] Without loss of generality we can assume that the supply function has no intercept which simplifies our algebra.

The state welfare loss as a result of the federal government tax revenue is given by the rectangular area ($CBHG$):

$$T_r(t^f) = t^f \frac{p_A q_A (\epsilon_s - \epsilon_d)^2}{((1+t^f)\epsilon_s - \epsilon_d)^2}.$$

Total federal tax revenue is $R^f = \sum_r^N T_r(t^f)$, and this must finance an exogenous level of expenditure $\sum_r^N \bar{G}_r$. We thus assume that federal government expenditure decisions are divorced from revenue sources. This assumption is likely realistic for most federations, where federal government expenditures can have a redistributive effect across the states in the federation. Because federal expenditures are constant, we can ignore them in the welfare calculation.

Now consider the introduction of a new environmental tax in state $r = 1$, with a value of t_1^r levied as a specific (excise) tax, for example on the carbon content of the good. The relationship between consumer and producer prices in state 1 is then $p_E = p_D(1 + t_f) + t_1^r$. Under the new state environmental tax, the two sources of welfare loss in state 1 are affected. The deadweight loss associated with the two taxes in state 1, holding the federal tax rate constant at t^f, is given by triangle area (ADE) in Figure 1:

$$DWL_1(t^f, t_1^r) = \frac{(\epsilon_s - \epsilon_d)(p_A t^f + t_1^r)^2}{2\left((1+t^f)\epsilon_s - \epsilon_d\right)^2}.$$

The federal tax payment of state 1 is the rectangular area ($FDIJ$):

$$T_1(t^f, t_1^r) = t^f \frac{p_A q_A (\epsilon_s - \epsilon_d)^2 - 2p_A(\epsilon_s - \epsilon_d)t_1^r + \epsilon_s (t_1^r)^2}{((1+t^f)\epsilon_s - \epsilon_d)^2}.$$

It is obvious that the deadweight loss in state 1 increases as a result of the implementation of the state environmental tax from the comparison of $DWL_r(t^f)$ and $DWL_1(t^f, t_1^s)$ in the equations above (also see Figure 1). Likewise, the revenue raised by the federal government in state 1 is reduced as a result of the implementation of the state excise tax. The fall in federal government revenue is a result of reduction in the producer price as well as the equilibrium quantity caused by the implementation of the state tax. The fall in federal government revenue in the implementing

state generates a welfare gain from the perspective of the implementing state, by shifting the burden of federal tax revenue to other states. We refer to this as a vertical fiscal externality, and it can partially or completely offset the welfare loss from the increase in the deadweight loss. Figure 2 graphically sketches the fiscal externality effect and the carbon policy effect.

In order to finance an exogenous level of government expenditure, the federal government must increase the federal tax rate from t^f to $\tilde{t}^f$ in response to the reduction in federal revenue from state 1. We can calculate the required increase in federal government tax necessary to ensure a constant level of federal revenue:

$$NT_r(t^f) = (N-1)T_r(\tilde{t}^f) + T_1(\tilde{t}^f, t_1^r)$$

Without loss of generality we can simplify the expression for $\tilde{t}^f$ by assuming that the number of states, N, is large. When N is large, the new environmental tax in state 1 has a incremental effect on federal government revenue, such that $\tilde{t}^f \approx t^f$.

We can then measure the change in welfare in state 1 following implementation of the environmental tax by comparing the change in federal tax revenue and deadweight loss due to the state tax. The reduction in tax revenue paid by the state to the federal government is a welfare gain for state 1 and is determined by:

$$T_1(t^f) - T_1(t^f, t_1^r) = \frac{t^f\left(2p_A(\epsilon_s - \epsilon_d)t_1^r - \epsilon_s(t_1^r)^2\right)}{((1+t^f)\epsilon_s - \epsilon_d)^2},$$

while the increase in the deadweight loss of state 1 is:

$$DWL_1(t^f, t_1^r) - DWL_1(t^f) = \frac{(\epsilon_s - \epsilon_d)(t_1^r)^2 + 2p_A t^f(\epsilon_s - \epsilon_d)t_1^r}{2((1+t^f)\epsilon_s - \epsilon_d)^2}.$$

As the state tax is increased, the reduction of the federal tax payment increases at a decreasing rate (concave function), whereas the increase in the deadweight loss increases at an increasing rate (convex function). Thus, when the state tax is large, the increase in the deadweight loss outweighs

the reduction of the federal tax.

Lastly, we show that when the state tax is small, the federal tax payment reduction dominates the increase in the deadweight loss. The total effect (the reduction of federal government payment minus the increase in the deadweight loss) is:

$$\Big(T_1(t^f) - T_1(t^f, t_1^r)\Big) - \Big(DWL_1(t^f, t_1^r) - DWL_1(t^f)\Big) = \frac{\big(-2\epsilon_s t^f - (\epsilon_s - \epsilon_d)\big)\,(t_1^r)^2 + 2p_A t^f(\epsilon_s - \epsilon_d)t_1^s}{2((1+t^f)\epsilon_s - \epsilon_d)^2}.$$

By taking the derivative with respect to t_1^r, we confirm that the total effect is positive when[5]

$$0 < \frac{t_1^r}{p_A} < \frac{2t^f(\epsilon_s - \epsilon_d)}{2\epsilon_s t^f + (\epsilon_s - \epsilon_d)},$$

whereas it is negative when

$$\frac{t_1^r}{p_A} > \frac{2t^f(\epsilon_s - \epsilon_d)}{2\epsilon_s t^f + (\epsilon_s - \epsilon_d)}.$$

Figure 3 illustrates the relative importance of the environmental policy effect and the fiscal externality effect as a function of the environmental tax rate.[6] In line with our analytical reasoning we observe a welfare gain when the magnitude of the state-level environmental tax is small, followed by a reduction in welfare when the state-level environmental tax becomes large enough. We take this insight to the general equilibrium analysis, where we ascertain the importance of the fiscal externality effect in a more complex and realistic setting based on empirical data.

3 Numerical general equilibrium model

To provide numerical estimates of the effect of vertical fiscal externalities in an environmental context, we use a static, multi-sector, multi-region, computable general equilibrium (CGE) model of the Canadian economy. The model is described in detail in Böhringer et al. (2015). Appendix

[5] Since the state tax is an exercise tax, the size relative to original price matters rather than the level of the exercise tax itself.

[6] As is common in partial equilibrium analysis of tax policy the welfare change for the tax-implementing state is captured by the change in producer and consumer surplus adjusted for changes in tax payments. The code for replicating Figure 3 is included in the electronic annex to this article.

C features a formal algebraic model summary.[7]

The model captures characteristics of provincial (regional) production and consumption patterns through detailed input-output tables and links provinces via bilateral trade flows. Each Canadian province is explicitly represented as a region, except Prince Edward Island and the Territories, which are combined into one region. The representation of the rest of the world is reduced to import and export flows to Canadian provinces which are assumed to be price takers in international markets. To accommodate analysis of energy and climate policies the model incorporates rich detail in energy use and carbon emissions related to the combustion of fossil fuels.

The model features a representative agent in each province that receives income from three primary factors: labour, capital, and fossil-fuel resources. Each of these sources of income is taxed by both federal and provincial governments. The representative agent in each region is endowed with a fixed supply of labour. In the sensitivity analysis, we explore the effect of assuming an upward-sloping labour supply function. Labour is treated as perfectly mobile between sectors within a region, but not mobile between regions. The representative agent in each region also has an endowment of capital, which it rents to production sectors. For our central case simulations, we adopt a specification where capital is sectorally mobile but regionally immobile - this allows us to focus on vertical fiscal externalities and ignore horizontal externalities. We explore alternative assumptions regarding capital mobility in the sensitivity analysis. There are three fossil resources specific to the respective sectors in each province: coal, crude oil, and natural gas.

Given our analysis of CO_2 emission reduction policies, the choice of sectors in the model has been to keep the most carbon-intensive sectors in the available data as separate as possible. The energy goods identified in the model include coal, gas, crude oil, refined oil products and electricity. This disaggregation is essential in order to distinguish energy goods by carbon intensity and the degree of substitutability. In addition the model features major carbon-intensive non-energy industries which are potentially those most affected by emission reduction policies.

Production of output in each sector and each region is by a perfectly competitive representative firm operating with constant returns to scale. Production follows a nested constant elasticity of

[7] A complete set of model files is provided in the electronic annex to this article.

substitution (CES) function, which captures trade-offs between inputs of capital, labor, energy, and material (see Figure 4 for non-extractive sectors and Figure 5 for extractive (fossil fuel producing) sectors). The energy composite includes electricity, coal, natural gas, and refined petroleum products, which enter as shown in Figures 4 and 5. For extractive sectors, production requires inputs of a fixed resource factor at the top level; the top level elasticity of substitution is calibrated in line with exogenous estimates on resource supply elasticities.

Bilateral trade between provinces as well as between each province and the rest-of-world is modeled using the Armington (1969) approach, which distinguishes between domestic and foreign goods by origin. As illustrated in Figure 6, each consumption good is a CES aggregate of domestically-produced and imported varieties. The domestic variety is nested with within-country imported variety, and then the CES aggregate of within-country supply is nested with international imports. On the export side, product differentiation between goods supplied to different markets (i.e., the domestic home province, other provinces, and the world market) is captured through a nested constant elasticity of transformation (CET) function (see Figure 7).

Two levels of government are explicitly represented in the model. In each province, a provincial government raises revenue from taxes on outputs and inputs to production, sales to final consumers, as well as on labour, capital, and natural resource income. Tax rates are calibrated to match benchmark government revenue from the System of National Accounts (tax rates differ according to the province). The difference between benchmark provincial government revenues and expenditures is the provincial deficit, which is kept constant throughout the simulations reflecting no change in net indebtedness for each province. Our simulations refer to the unilateral introduction of a carbon tax by a single provincial government. We thereby hold provincial government provision of public services fixed at the benchmark level. To balance the provincial government budget in the policy counterfactuals, we (endogenously) adjust lump sum transfers received from the representative agent within the province. By using lump sum transfers as the equal yield instrument of the provincial government throughout the simulations, we can abstain from the more detailed analysis of efficiency implications associated with alternative revenue recycling strategies (Goulder et al. (1999)).

In addition to the provincial governments, there is one federal government agent that serves all provinces. The federal government raises taxes from the same bases as the provincial governments: inputs to and outputs from production sectors, sales to final consumers, and labour, capital, and natural resource income. Federal tax rates, which are identical across provinces, are calculated in the benchmark to match System of National Accounts data. Real federal government expenditure in each province held fixed at the benchmark level. The introduction of a carbon tax by a province can have an effect on federal government revenues, by changing the size of the federal government tax base. In order to maintain the federal budget in balance, we endogenously adjust federal government tax rates.[8] It is the presence of the federal government with its equal yield constraint (constant real expenditure and tax rates which are set endogenously to maintain expenditure), that provides the scope for vertical fiscal externalities.

For model parametrization, we follow the standard approach in computable general equilibrium modeling and calibrate each production function in the model to observed cost shares and exogenous estimates of substitution elasticities. Cost share data come from Canada's System of National Accounts, using the 2006 year Statistics Canada (2006a,b). To reflect the fact that actual policy-proposals for greenhouse gas reduction are typically made for some future year, we forward-calibrate the model to a forecast 2020 benchmark data set. The forward-calibration procedure is described in detail in Böhringer et al. (2009), and uses Environment Canada projections of economic growth and energy demand. We draw elasticity estimates for each production sector from Dissou et al. (2012) and Okagawa and Ban (2008). Trade elasticities are based on Narayanan et al. (2012) and fossil fuel supply elasticities are related to (Graham et al., 1999; Krichene, 2002; Ringlund et al., 2008).

4 Welfare decomposition

The virtue of the general equilibrium approach to economic analysis is its comprehensive representation of market interactions. The economic impacts of policy interference quantified by CGE models thereby captures multiple direct and indirect economic responses that can both reinforce

[8] We adjust all federal government tax rates by the same proportion to balance the federal budget.

one another or work in opposite directions. A decomposition of the general equilibrium outcome can be useful to better understand the relative importance of partial equilibrium effects. For our assessment of the role of vertical fiscal externalities in environmental regulation we present a decomposition into three effects. More specifically, the welfare change in a single province implementing a unilateral carbon tax is composed of a:

Domestic market effect The domestic market effect is the effect of the carbon tax on the welfare of the representative agent in the implementing province, holding external prices (i.e., the terms of trade) and the federal government balance in that province fixed. The domestic market effect is the effect of a carbon tax on welfare as typically calculated in a small open economy. It is generally considered to be negative, but if there are high levels of pre-existing distortionary taxes in the economy and carbon tax revenues are used to reduce these, it can be positive (Goulder et al., 1999). This effect is identical to the deadweight loss associated with the state-level environmental tax in the partial equilibrium model in Section 2.

Terms of trade effect The terms of trade effect is the effect of the carbon tax on external prices facing the implementing province. Imposition of the carbon price in a province influences prices in other provinces via changes in bilateral trade flows. The changes in external prices correspond to changes in the terms of trade which imply a secondary welfare gain or welfare loss.[9]

Fiscal externality effect The fiscal externality effect relates to the balance of the federal government within the province. Keeping federal government expenditures in the province constant while the tax transfer from the province to the government decreases, the fiscal externality effect represents a welfare gain to the province. This effect is identical to the difference in federal government revenue before and after the state-level environmental tax in the partial equilibrium model in Section 2.

[9]The effect of unilateral carbon regulations on terms of trade has been the focus of Böhringer et al. (2014) and Böhringer and Rutherford (2002).

We implement our decomposition by building on the proposition by Böhringer and Rutherford (2002) that each region of a multi-region CGE model can be represented as a small open economy in order to separate the domestic policy effect under fixed terms of trade. Policy-induced changes in external prices can then be imposed parametrically on the small open economy variant of each model region. We extend this approach by accounting in addition for the fiscal externality effect arising in the state-federation setting. More specifically, analysis and decomposition of welfare effects proceeds as follows. We use the multi-region model to calculate the full general equilibrium effect of the carbon tax on welfare in the tax-implementing province. The welfare effect is measured as percent change in Hicksian equivalent variation (HEV) of income from the benchmark. The multi-region solution provides all information for welfare decomposition within the single-region variant. The single region variant is identical to representation of each province in the multi-region model, with three exceptions. First, it treats external prices from other provinces as parametric, rather than endogenous. Second, it treats federal government tax rates as parametric, rather than endogenous. Third, it treats the portion of federal government revenue raised in other provinces as parametric, rather than endogenous. Using the single-region variant, we can parametrically impose the carbon tax, the vector of exogenous prices facing the province, federal government tax rates, and federal government income raised in other provinces. Values for these exogenous parameters are drawn from the solution to the multi-region variant of the model. Imposing only the carbon tax in the single-region model, while maintaining external prices and the federal government balance at benchmark levels, produces an estimate of the domestic market effect. Imposing only the vector of external prices facing the province, while maintaining the carbon tax and federal balance at benchmark levels, generates the terms of trade effect. Imposing only the federal government tax rate and revenue from other provinces, while maintaining the carbon tax and external prices at benchmark levels, generates the fiscal externality effect.[10] A more formal description of our decomposition methodology is provided in Appendix D.

It is important to consider the separability of the three effects. The fiscal externality effect is a pure transfer to the implementing region from other regions, which occurs via the federal

[10] If we simultaneously impose all the external shocks on the single-region variant we arrive at the identical solution for the respective province as calculated by the multi-region model.

government's budget balance within the region. Given the homothetic utility functions of the representative agents, the fiscal externality effect does not change relative prices. As a result, the fiscal externality effect is additively separable from the other two effects. The other two effects, however, both change relative prices. Although we can calculate the domestic market effect and the terms of trade effect as described above, these effects are not additively separable. In the results section below, we therefore decompose the full welfare impact of a unilateral carbon policy into a fiscal externality effect and a composite carbon policy effect, the latter of which includes both the terms of trade effect and the domestic market effect.

5 Scenarios and results

5.1 Policy scenarios

We show the importance of fiscal externalities arising from unilateral implementation of environmental regulation by a single state in a federation. Specifically, we quantify the welfare effects from unilateral carbon taxation by a single Canadian province (we produce results for each province separately in a series of simulations that successively consider each province as the implementing province). We use our decomposition method to assess the relative importance of the fiscal externality effect vis-à-vis the carbon policy effect.

Revenue from the unilateral carbon tax is collected by the provincial government in the implementing province. The provincial governments use lump sum transfers to the representative agents as the equal yield instrument while the federal government maintains a constant level of real expenditure by altering all federal tax rates by the same proportion.

5.2 Results

In our central case simulations we estimate the costs of achieving a 10 percent reduction in carbon emissions within a single Canadian province which levies a sufficiently high carbon tax on the domestic use of fossil use. Given the arbitrariness of external cost estimates for climate change, we do not include benefits from emission reduction in our welfare calculation. The welfare impacts -

reported as the percentage change in Hicksian equivalent variation of income from the no-policy benchmark - thus must be interpreted as the outcome of a cost effectiveness analysis rather than a cost benefit analysis.

Figure 8 decomposes the welfare effect of achieving a 10 percent reduction of carbon. Each column in the table represents a separate scenario, in which the implementing province is identified by the column heading, and imposes a unilateral carbon tax to achieve the desired reduction in its own emissions. The total welfare change for the tax implementing province is calculated by simulating the unilateral policy in the multi-region variant of our CGE model. The total welfare cost associated with a 10 percent reduction in emissions is heterogeneous across provinces reflecting differences in economic structures which drive the ease of substituting away from carbon in production and consumption. However, the total welfare effect of the unilateral carbon policy is positive for all cases, suggesting that unilateral emission reduction in a province can be welfare improving from the perspective of the province even when abstracting from potential environmental benefits.[11]

To assess the importance of the fiscal externality effect in environmental regulation we decompose the total welfare effect into two components - the fiscal externality effect and the carbon policy effect - using our small open economy single-region variant of the model. The fiscal externality effect results from the federal government budget constraint. When the implementing province applies a carbon tax to reduce carbon emissions, it affects production, sales, and income in the province, all of which are components of the federal tax base. As the federal tax base shrinks in the implementing province due to the carbon tax, the federal government increases tax rates to make up its budget shortfall. Because the federal government applies the same taxes across all provinces, the burden of the increase in federal taxes falls substantially on other provinces. In contrast, federal expenditures are held fixed in real terms in each province. The combination of these two effects implies that the federal budget balance (revenues less expenditures) in the implementing province declines, while it increases in other provinces. This results in an income transfer into the implementing province via the federal government budget closure rule. In each case, the fiscal externality effect is positive (as

[11] In the simulations, welfare in Nova Scotia falls in response to a unilateral10 percent reduction in carbon emissions. However, a 5 percent reduction in emissions increases welfare in that province.

expected) and substantial in magnitude relative to the total effect of the policy.

The carbon policy effect is the effect of domestic emission pricing on welfare, exclusive of the fiscal externality effect. It includes both the abatement cost in the implementing region (inclusive of any tax interaction effects), as well as the terms of trade effect. The carbon policy effect results in a welfare loss in the implementing region.[12] Importantly, the (typically negative) carbon policy effect is generally smaller than the (positive) fiscal externality effect at the 10 percent emission reduction level, suggesting a welfare gain associated with introduction of a modest unilateral carbon policy.

Table 1 shows the effect of unilateral implementation of carbon policy in a single province on the welfare of other provinces. In the table, the province given by the column heading implements the unilateral policy, and the welfare measure is associated with the province given by the row heading. Values along the diagonal correspond to the "total welfare change" column in Figure 8. The table shows that the welfare gain achieved by unilateral provincial emission reduction is a result of welfare reductions in other provinces with the welfare effect for the total of Canada being negative.

Figure 9 decomposes the welfare effect at different levels of emission reduction stringency ranging from 0 percent to 30 percent. As laid out in Section 2, the carbon policy effect is convex in the stringency of the state-level environmental policy, while the fiscal externality effect is concave. As a result, following introduction of a carbon policy, welfare in the implementing state increases for small emission reductions, and is reduced for large emission reductions. We thus see that a non-zero amount of emission abatement is optimal from the perspective of a province, even neglecting environmental benefits. For the central case parametrization of our model, the welfare gains to a single province are maximized for a reduction in emissions of around 10 percent, and a reduction in emissions of up to 20 percent may still come at no economic cost for the unilaterally abating province.

[12] The one outlier is Manitoba where the terms of trade effect is large enough to render the overall carbon policy effect positive.

5.3 Sensitivity analysis

We conduct sensitivity analysis to investigate the relative importance of the vertical fiscal externality effect under alternative assumptions for trade responsiveness (Armington elasticities) and closures in the labour and capital markets. For the sake of brevity we limit exposition of the sensitivity analysis to a single province - Ontario - which cuts emissions by 10 percent unilaterally using a carbon tax and returns the carbon tax revenue in lump sum to the province's representative consumer. The results of our sensitivity analysis are presented in Figure 10.[13]

The Armington elasticity determines the ease of substitution between domestically produced goods and goods of the same variants produced outside the province. Lower (higher) Armington elasticities increase (decrease) the scope for shifting cost of unilateral abatement to trading partners via policy-induced changes in the terms of trade. In the sensitivity analysis we double and halve the Armington elasticities. In the central case simulations, capital is assumed to be sectorally mobile, but immobile between regions. In the sensitivity analysis, we treat capital as mobile both between regions and between sectors. We test two alternative mobility assumptions: one in which capital is mobile between sectors and Canadian provinces, and one in which we treat capital as mobile not just between Canadian provinces, but also between Canada and the rest of world.[14]

Introducing capital mobility allows the model to capture the potential for horizontal externalities. When a province imposes a tax on carbon, part of the incidence of the tax is borne by capital. To the extent that capital is mobile between regions, it can escape the burden of the tax. Mobility of capital out of a region can worsen labour productivity in a region, with negative welfare impacts. Inversely, the mobility of capital to other regions can improve productivity in those regions: a horizontal externality. This can generate a rationale for a government to reduce the stringency of environmental taxes.

We also investigate the effect of changing the labour market closure in the model. In the central case simulations, the consumer is endowed with a fixed supply of labour, all of which is

[13] Simulations (available upon request) for other provinces yield qualitatively the same results. In particular, the fiscal externality effect is prominent relative to the carbon policy effect in all sensitivity cases in all provinces.

[14] Essentially, this involves treating the return on capital as exogenous. To accommodate capital inflows or outflows, the balance of payments constraint is modified such that the change in balance of trade is required to equal the change in balance of foreign savings.

used in production of goods. In the sensitivity analysis, we adopt a closure where a portion of the consumer's labour supply is consumed directly by the consumer as leisure (which enters the consumer's utility function). Consumption of leisure responds to the price of leisure (i.e., the wage rate).[15] With elastic labor supply the pre-existing tax on labour renders a new carbon tax more distorting, because of negative tax interaction effects between the carbon tax and the existing labour tax Goulder et al. (1999); Parry (1995).

Figure 10 shows the (decomposed) welfare results for alternative Armington elasticities as well as capital and labour market closures. Changing the Armington elasticities has only second-order effects. Introducing either capital mobility or an upward-sloping labour supply increases the carbon policy effect markedly. The economic reasoning behind this is straightforward: both of these changes increase pre-existing tax distortions, and as a result of the tax interaction effect, increase the deadweight loss associated with carbon taxation. When leisure is introduced into the model (while maintaining capital as immobile between regions), the fiscal externality effect decreases. In this setting, capital bears the greater incidence of the tax since it is immobile, leading to increases in the relative wage rate and more labor supply in the regulated region. The increase in labour supply increases federal government tax revenue from the regulated region, and reduces the magnitude of the fiscal externality. When capital mobility is introduced, the fiscal externality effect is increased. Capital mobility causes some capital to relocate from the regulated region to other provinces or to the rest of the world as a result of the carbon tax. Capital relocation further reduces the federal tax base in the regulated region, which increases the fiscal externality effect.

Overall, our qualitative conclusions are robust. In particular, the fiscal externality effect remains substantial in magnitude relative to the carbon policy effect.

6 Conclusion

Increasingly, environmental policies are being pursued by sub-national governments. Whenever a sub-national government implements a new environmental policy, there is scope for vertical fiscal

[15] We calibrate the elasticity of substitution between leisure and consumption to match estimates of uncompensated and compensated labour supply elasticities, using the method suggested in Ballard (2000) and estimates for labour supply elasticites provided in Cahuc and Zylberberg (2004).

externalities: some or all of the net burden of the environmental regulation is shifted to other jurisdictions in the federation as a result of the federal budget constraint.

In this paper, we have assessed the potential magnitude of vertical fiscal externalities in an environmental context. We show that vertical fiscal externalities are an important determinant of the economic impact emerging from environmental regulation in a sub-national jurisdiction: A region can shift the cost of unilateral emission regulation to other regions in the federation facing net economic gains at least for modest levels of emission reduction. Our finding may have important policy implications given the increasing decentralization of environmental regulation.

There are a number of ways in which we could extend the current analysis. First, we could adopt a strategic perspective, where tax-setting by one government responds to tax choices by other governments. Second, we could examine the effect to which inter-governmental grants affect our conclusions regarding vertical fiscal externalities. Third, we could test the sensitivity of our results for alternative environmental policy instruments (e.g., energy or carbon efficiency standards). Fourth, we could calculate the optimal environmental tax in an federal setting considering alternative revenue recycling options. We plan to address these issues in future research.

References

Armington, P. S. (1969). A theory of demand for products distinguished by place of production. *IMF Staff Papers*, 159–178.

Ballard, C. (2000). How many hours are in a simulated day? the effects of time endowment on the results of tax-policy simulation models. *Unpublished paper, Michigan State University*.

Böhringer, C., A. Lange, and T. F. Rutherford (2014). Optimal emission pricing in the presence of international spillovers: Decomposing leakage and terms-of-trade motives. *Journal of Public Economics 110*, 101–111.

Böhringer, C., A. Löschel, U. Moslener, and T. F. Rutherford (2009). EU climate policy up to 2020: An economic impact assessment. *Energy Economics 31*, S295–S305.

Böhringer, C., N. Rivers, T. F. Rutherford, and R. Wigle (2015). Sharing the burden for climate change mitigation in the Canadian federation. *Canadian Journal of Economics*. Forthcoming.

Böhringer, C. and K. E. Rosendahl (2010). Green promotes the dirtiest: on the interaction between black and green quotas in energy markets. *Journal of Regulatory Economics 37*(3), 316–325.

Böhringer, C. and T. F. Rutherford (2002). Carbon abatement and international spillovers. *Environmental and Resource Economics 22*(3), 391–417.

Brülhart, M. and M. Jametti (2006). Vertical versus horizontal tax externalities: An empirical test. *Journal of Public Economics 90*(10), 2027–2062.

Cahuc, P. and A. Zylberberg (2004). *Labor Economics*. MIT Press.

Dahlby, B. and L. S. Wilson (2003). Vertical fiscal externalities in a federation. *Journal of Public Economics 87*(5), 917–930.

Devereux, M. P., B. Lockwood, and M. Redoano (2007). Horizontal and vertical indirect tax competition: Theory and some evidence from the USA. *Journal of Public Economics 91*(3), 451–479.

Dissou, Y., L. Karnizova, and Q. Sun (2012). Industry-level econometric estimates of energy-capital-labour substitution with a nested CES production function. Technical report, Department of Economics, University of Ottawa.

Esteller-Moré, Á. and A. Solé-Ollé (2001). Vertical income tax externalities and fiscal interdependence: Evidence from the US. *Regional Science and Urban Economics 31*(2), 247–272.

Goulder, L. H., I. W. Parry, R. C. Williams III, and D. Burtraw (1999). The cost-effectiveness of alternative instruments for environmental protection in a second-best setting. *Journal of Public Economics 72*(3), 329–360.

Graham, P., S. Thorpe, and L. Hogan (1999). Non-competitive market behavior in the international coking coal market. *Energy Economics 21*, 195–212.

Hayashi, M. and R. Boadway (2001). An empirical analysis of intergovernmental tax interaction: the case of business income taxes in canada. *Canadian Journal of Economics 34*(2), 481–503.

Keen, M. (1998). Vertical tax externalities in the theory of fiscal federalism. *IMF Staff Papers 45*(3), 454–485.

Keen, M. J. and C. Kotsogiannis (2002). Does federalism lead to excessively high taxes? *The American Economic Review 92*(1), 363–370.

Konisky, D. M. (2007). Regulatory competition and environmental enforcement: Is there a race to the bottom? *American Journal of Political Science 51*(4), 853–872.

Krichene, N. (2002). World crude oil and natural gas: A demand and supply model. *Energy Economics 24*, 557–576.

Kunce, M. and J. F. Shogren (2005). On interjurisdictional competition and environmental federalism. *Journal of Environmental Economics and Management 50*(1), 212–224.

Levinson, A. (2003). Environmental regulatory competition: A status report and some new evidence. *National Tax Journal*, 91–106.

Lutsey, N. and D. Sperling (2008). America's bottom-up climate change mitigation policy. *Energy Policy 36*(2), 673–685.

Narayanan, G., A. Badri, and R. McDougall (2012). Global trade, assistance, and production: The GTAP 8 data base. *GTAP documentation*.

Oates, W. E. (1999). An essay on fiscal federalism. *Journal of Economic Literature 37*(3), 1120–1149.

Oates, W. E. (2001). *A reconsideration of environmental federalism*. Resources for the Future Washington, DC.

Okagawa, A. and K. Ban (2008). Estimation of substitution elasticities for CGE models. *Discussion Papers in Economics and Business 16*.

Parry, I. W. (1995). Pollution taxes and revenue recycling. *Journal of Environmental Economics and Management 29*(3), S64–S77.

Rabe, B. G. (2008). States on steroids: the intergovernmental odyssey of American climate policy. *Review of Policy Research 25*(2), 105–128.

Ringlund, G., K. Rosendahl, and T. Skjerpen (2008). Do oilrig activities react to oil price changes? An empirical investigation. *Energy Economics 30*, 371–396.

Roth, K. (2012). The unintended consequences of uncoordinated regulation: Evidence from the transportation sector.

Statistics Canada (2006a). Final demand by commodity, S-level aggregation, Table 381-0012.

Statistics Canada (2006b). Inputs and output by industry and commodity, S-level aggregation, Table 381-0012.

Williams, R. C. (2011). Growing state–federal conflicts in environmental policy: The role of market-based regulation. *Journal of Public Economics*.

A Figures

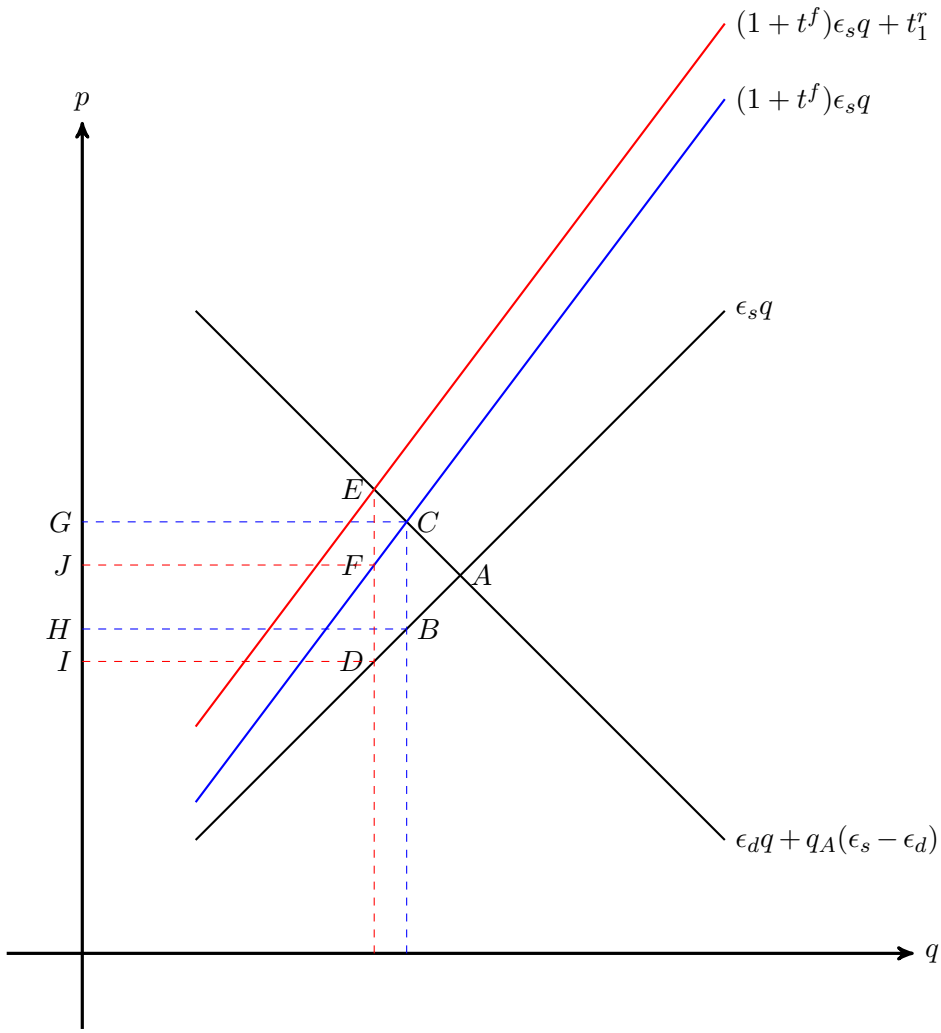

Figure 1: Partial equilibrium model setup. The model reflects the market for a good in a single state in a federation. An ad valorem federal tax (t^f) interacts with a new state environmental excise tax (t_1^r).

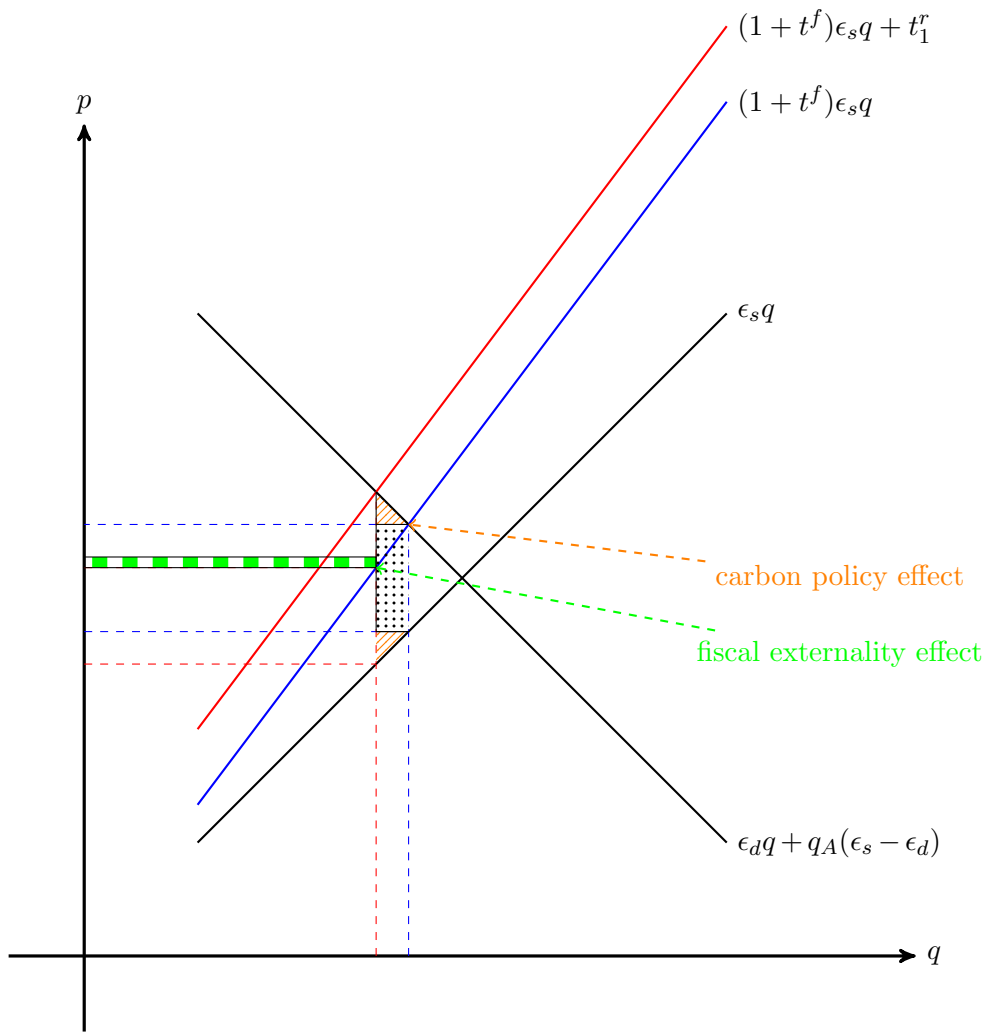

Figure 2: Welfare effect of unilateral implementation of state environmental tax in a partial equilibrium model. When a new state-level tax t_1^r is imposed, it exacerbates the pre-existing distortion caused by the federal tax t^f. This deadweight loss is given by the sum of the areas of the orange hatched triangles and the dotted rectangle. By reducing the state tax base, the new state tax also reduces federal tax revenue in the state, which is given by the sum of the areas of the green checked rectangle and the dotted rectangle. As a result, the net welfare change following a tax is determined by comparing the area of the orange hatched triangles (carbon policy effect) with the green checkered rectangle (fiscal externality effect).

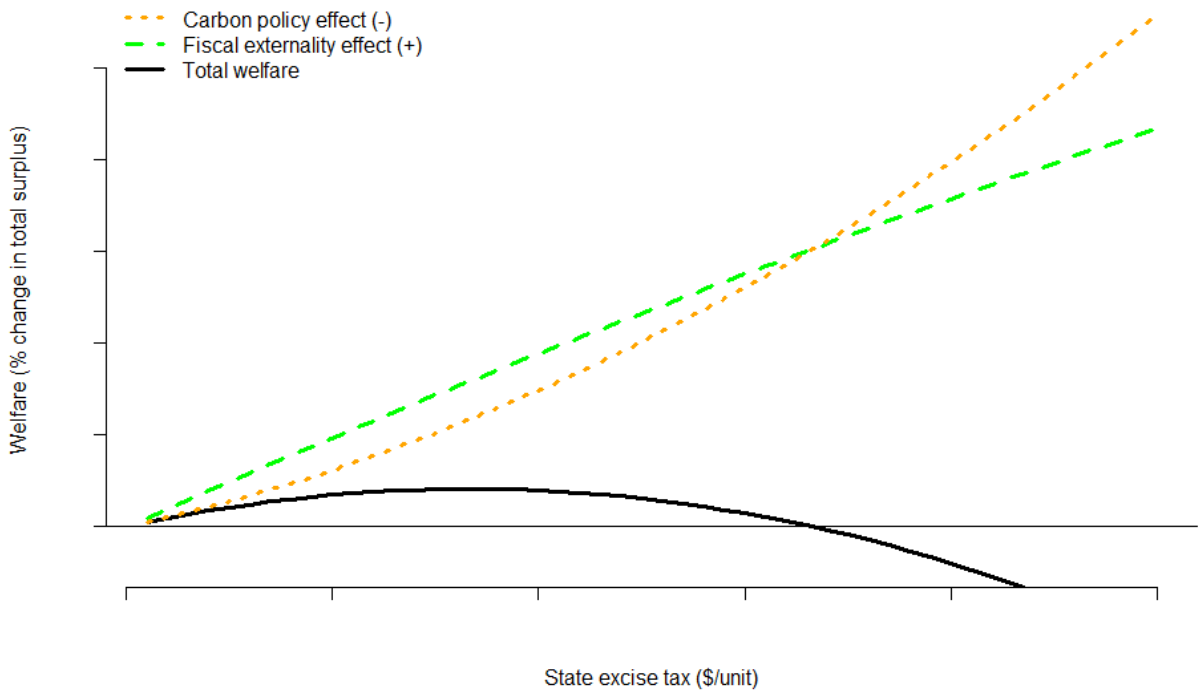

Figure 3: Numerical simulation of welfare impact of state environmental tax in a partial equilibrium model. Implementation of a new state-level environmental tax exacerbates pre-existing distortions, causing a loss in state welfare given by the dotted orange line labeled the *carbon policy effect*. The new state-level environmental tax also shrinks the state tax base and reduces federal revenue raised in the state, which increases state welfare. This effect is called the *fiscal externality effect* and is given by the dashed green line. For low levels of the state excise tax, the fiscal externality effect dominates the carbon policy effect, such that the net effect on state welfare - given by the solid black line - is positive.

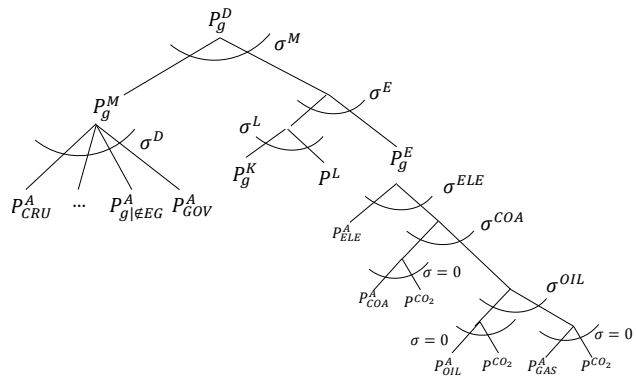

Figure 4: Production function for non-fossil fuel sectors. Region (r) subscripts dropped to reduce notational clutter.

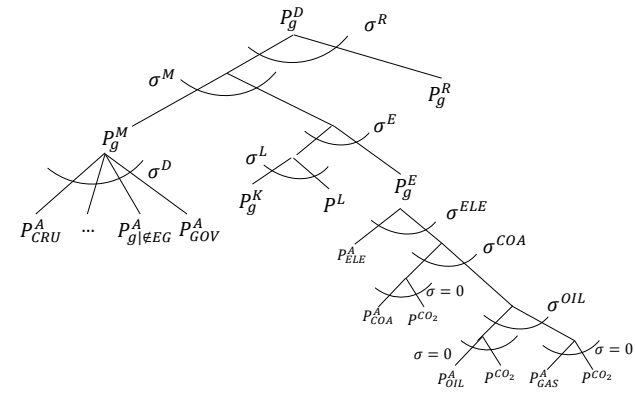

Figure 5: Production function for fossil fuel sectors. Region (r) subscripts dropped to reduce notational clutter.

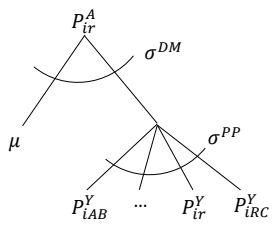

Figure 6: Production of Armington good i in region r

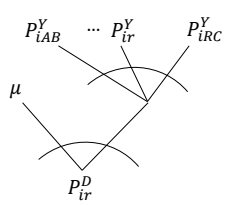

Figure 7: Transformation of output of good i in region r

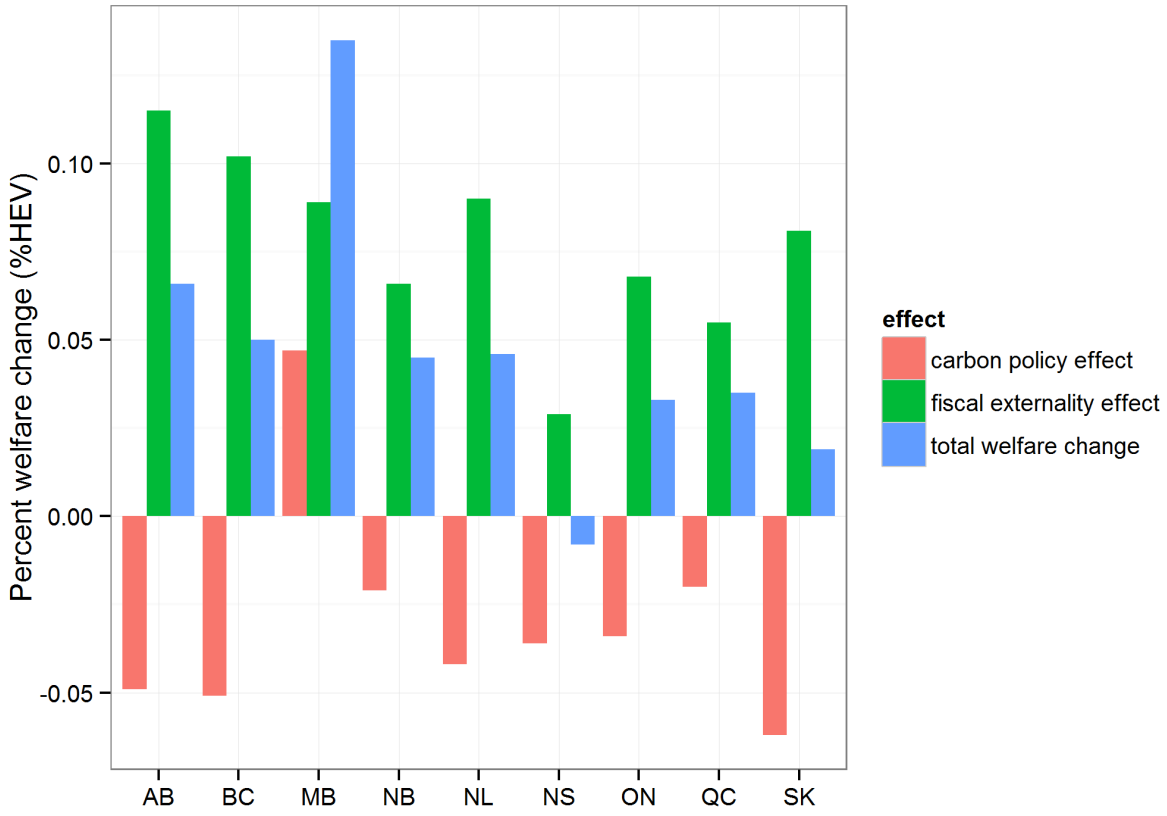

Figure 8: Decomposition of welfare effect from unilateral carbon policy implementation. Each set of three bars is an individual model simulation in which the corresponding province implements a unilateral carbon tax to reduce its own emissions by 10 percent. The carbon policy effect is the deadweight loss associated with the policy in the implementing region, and the fiscal externality effect corresponds to the balance of the federal government in the implementing region. The total welfare change is the sum of the carbon policy and fiscal externality effects.

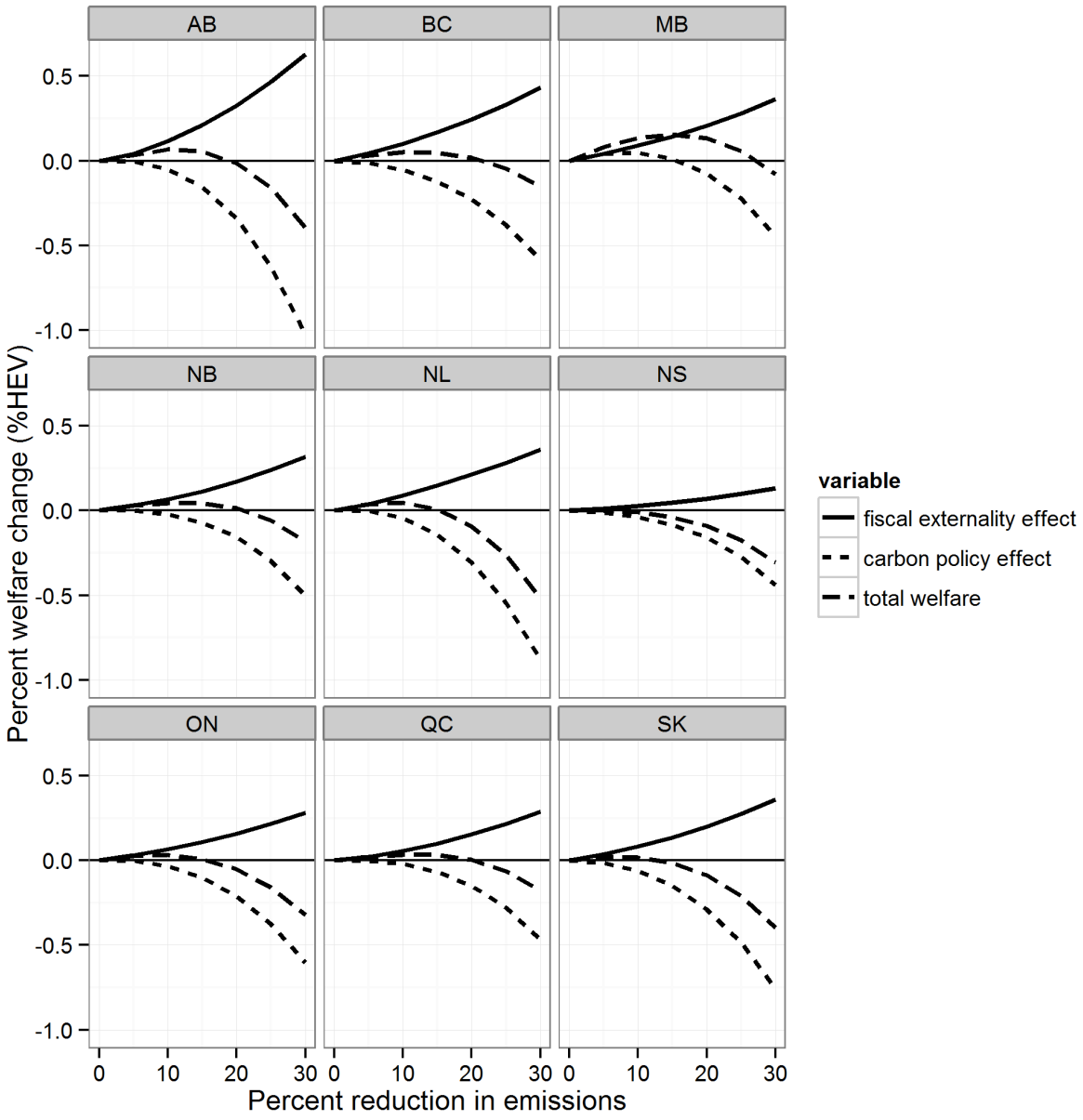

Figure 9: Decomposition of welfare effect from unilateral carbon policy implementation at different emission reduction stringencies. Each panel is a separate simulation of a unilateral market based policy that reduces carbon emissions in the province by 0 to 30 percent. The total effect on welfare is decomposed into a fiscal externality effect and a carbon policy effect.

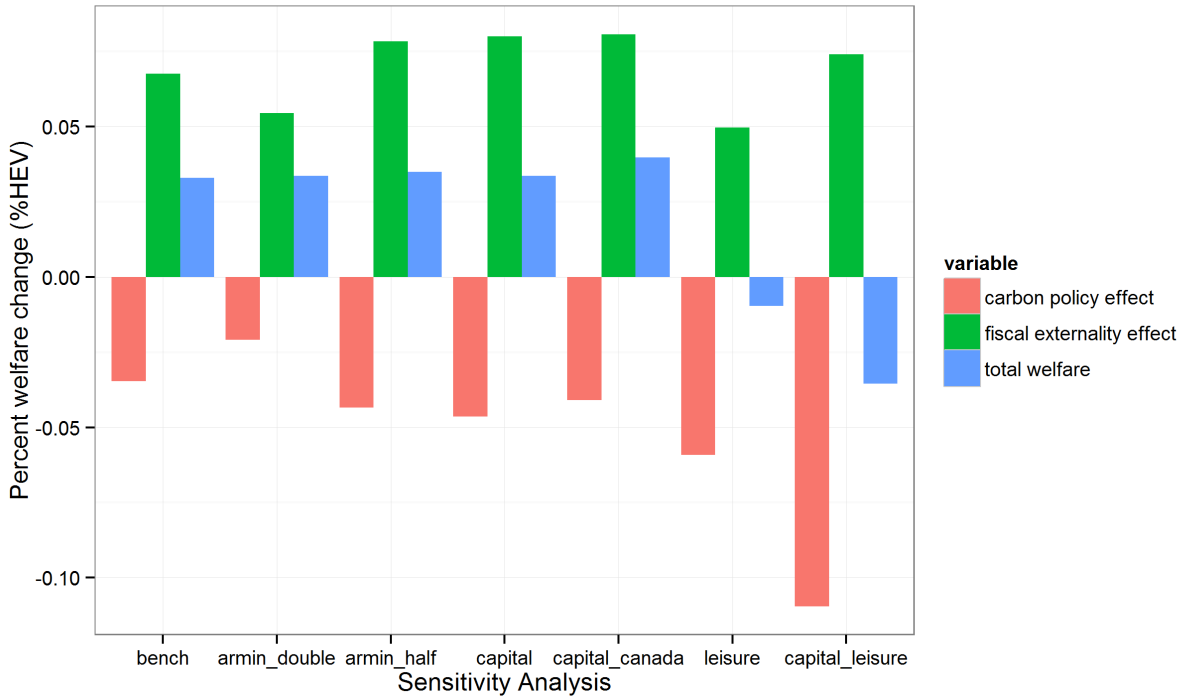

Figure 10: Sensitivity analysis of welfare effect from unilateral carbon policy implementation in Ontario to different model closures. In each case, Ontario reduces emissions unilaterally by 10 percent. Scenarios are as follows: bench - benchmark closure and parameters as described in the text; armin_double - double Armington elasticities; armin_half - half Armington elasticities; capital - capital is mobile between sectors and regions, including the rest of the world; capital_canada - capital is mobile between sectors and Canadian regions; leisure - the representative consumer demands leisure such that labour supply is endogenous; capital_leisure - capital is mobile between regions and the representative consumer demands leisure.

B Tables

	AB	BC	MB	NB	NL	NS	ON	QC	SK
AB	0.066	-0.040	-0.020	0.000	-0.002	-0.001	-0.180	-0.024	-0.014
BC	-0.031	0.050	-0.003	-0.001	-0.001	-0.001	-0.043	-0.016	-0.003
MB	-0.021	-0.015	0.135	-0.002	-0.001	-0.001	-0.022	-0.017	-0.008
NB	-0.010	-0.010	-0.001	0.045	-0.005	-0.002	-0.022	-0.016	-0.001
NL	-0.006	-0.014	-0.002	-0.025	0.046	-0.008	-0.065	-0.046	-0.001
NS	-0.015	-0.015	-0.003	-0.014	-0.006	-0.008	-0.048	-0.020	-0.003
ON	-0.022	-0.024	-0.008	-0.004	-0.003	-0.002	0.033	-0.030	-0.005
QC	-0.014	-0.015	-0.006	-0.006	-0.002	-0.001	-0.044	0.035	-0.003
SK	-0.008	-0.007	-0.006	0.000	0.000	0.000	-0.044	-0.007	0.019
RC	0.010	0.006	0.010	-0.017	-0.005	-0.007	0.011	-0.014	0.008
All	-0.010	-0.012	-0.003	-0.003	-0.002	-0.002	-0.028	-0.011	-0.004

Table 1: Welfare in percent change in Hicksian equivalent variation of income. Welfare change is due to unilateral implementation of a 10 percent emission cut by the column-region. Welfare impacts are associated with the row-region.

C Algebraic model summary (not for publication)

The model is formulated as a system of nonlinear inequalities. The inequalities correspond to the three classes of conditions associated with a general equilibrium: (i) exhaustion of product (zero profit) conditions for constant-returns-to-scale producers, (ii) market clearance for all goods and factors and (iii) income-expenditure balances. The first class determines activity levels, the second class determines prices and the third class determines incomes. In equilibrium, each of these variables is linked to one inequality condition: an activity level to an exhaustion of product constraint, a commodity price to a market clearance condition and an income to an income-expenditure balance.[16] Constraints on decision variables such as prices or activity levels allow for the representation of market failures and regulation measures. These constraints go along with specific complementary variables. In the case of price constraints, a rationing variable applies as soon as the price constraint becomes binding; in the case of quantity constraints, an endogenous tax or subsidy is introduced.[17]

In our algebraic exposition of equilibrium conditions below, we state the associated equilibrium variables in brackets. Furthermore, we use the notation Π^{Z}_{gr} to denote the unit profit function (calculated as the difference between unit revenue and unit cost) for constant-returns-to-scale production of item g in region r where Z is the name assigned to the associated production activity. Differentiating the unit profit function with respect to input and output prices provides compensated demand and supply coefficients (Hotelling's Lemma), which appear subsequently in the market clearance conditions.

We use g as an index comprising all sectors/commodities including the final consumption composite, the public good composite and an aggregate investment good. The index r (aliased with s) denotes regions. The index EG represents the subset of all energy goods except for crude oil (here: coal, refined oil, gas, electricity) and the label X denotes the subset of fossil fuels (here: coal, crude oil, gas), whose production is subject to decreasing returns to scale given the fixed supply

[16] Due to non-satiation expenditure will exhaust income. Thus, the formal inequality of the income-expenditure balance will hold as an equality in equilibrium.

[17] An example for an explicit price constraint is a lower bound on the real wage to reflect a minimum wage rate; an example for an explicit quantity constraint is the specification of a (minimum)target level for the provision of public goods.

of fuel-specific factors. Tables 2 to 9 explain the notations for variables and parameters employed within our algebraic exposition. Figures 4 to 6 provide a graphical representation of the functional forms. Numerically, the model is implemented under GAMS (Brooke et al. 1996)[18] and solved using PATH (Dirkse and Ferris 1995)[19].

Zero profit conditions

1. Production of goods except for fossil fuels ($Y_{gr}|_{g \notin X}$):

$$\Pi^Y_{gr} = \left(\theta^{EX}_{gr} \left(\frac{P^Y_{gr}(1 - tp^Y_{gr} - tf^Y_{gr})}{\bar{P}^Y_{gr}} \right)^{1+\eta} + \left(1 - \theta^{EX}_{gr}\right) \left(\frac{\mu(1 - tp^Y_{gr} - tf^Y_{gr})}{\bar{\mu}_{gr}} \right)^{1+\eta} \right)^{\frac{1}{1+\eta}}$$
$$- \left(\theta^M_{gr} P^{M\,1-\sigma^M}_{gr} + (1 - \theta^M_{gr}) \left(\left(\left(\theta^E_{gr} P^{E\,1-\sigma^E}_{gr} + (1 - \theta^E_{gr}) \left(\theta^L_{gr} P^{L\,1-\sigma^L}_{r} + (1 - \theta^L_{gr}) P^{K\,1-\sigma^L}_{gr} \right)^{\frac{1}{1-\sigma^L}} \right)^{1-\sigma^E} \right)^{\frac{1}{1-\sigma^E}} \right)^{1-\sigma^M} \Bigg)^{\frac{1}{1-\sigma^M}}$$
$$\leq 0$$

2. Production of fossil fuels ($Y_{gr}|_{g \in X}$):

$$\Pi^Y_{gr} = \left(\theta^X_{gr} \left(\frac{P^Y_{gr}(1 - tp^Y_{gr} - tf^Y_{gr})}{\bar{P}^Y_{gr}} \right)^{1+\eta} + \left(1 - \theta^X_{gr}\right) \left(\frac{\mu(1 - tp^Y_{gr} - tf^Y_{gr})}{\bar{\mu}_{gr}} \right)^{1+\eta} \right)^{\frac{1}{1+\eta}}$$
$$- \left(\theta^R_{gr} \left(\frac{P^R_{gr}(1 + tp^R_{gr} + tf^R_{gr})}{\bar{P}^R_{gr}} \right)^{1-\sigma^R_{gr}} + \left(1 - \theta^R_{gr}\right) \left(\theta^L_{gr} P^L_r + \sum_i \theta^R_{igr} \frac{(P^A_{ir}(1 + tp^D_{igr} + tf^D_{igr}) + a^{CO_2}_{igr} p^{CO_2}_r)}{\bar{P}^A_{igr}} \right)^{1-\sigma^R_{gr}} \right)^{\frac{1}{1-\sigma^R_{gr}}}$$
$$\leq 0$$

3. Sector-specific material aggregate (M_{gr}):

$$\Pi^M_{gr} = P^M_{gr} - \left(\sum_{i \notin EG} \theta^M_{igr} \left(\frac{P^A_{ir}(1 + tp^D_{igr} + tf^D_{igr})}{\bar{P}^A_{igr}} \right)^{1-\sigma^D} \right)^{\frac{1}{1-\sigma^D}} \leq 0$$

[18] Brooke, A., D. Kendrick and A. Meeraus (1996), *GAMS: A User's Guide*, Washington DC: GAMS

[19] Dirkse, S. and M. Ferris (1995), "The PATH Solver: A Non-monotone Stabilization Scheme for Mixed Complementarity Problems", *Optimization Methods & Software 5*, 123-156.

4. Sector-specific energy aggregate (E_{gr}):

$$
\begin{aligned}
\Pi^E_{gr} =& P^E_{gr} - \Bigg(\Bigg(\theta_{ELEgr}\left(\frac{P^A_{ELEr}(1+tp^D_{ELEgr}+tf^D_{ELEgr})}{\bar{P}_{ELEgr}}\right)^{1-\sigma^{ELE}} \\
&+ (1-\theta_{ELEgr})\Bigg(\Bigg(\theta_{COAgr}\left(\frac{P^A_{COAr}(1+tp^D_{COAgr}+tf^D_{COAgr})}{\bar{P}_{COAgr}} + a^{CO_2}_{COAgr}p^{CO_2}_r\right)^{1-\sigma^{COA}} \\
&+ (1-\theta_{COAgr})\Bigg(\theta_{OILgr}\left(\frac{P^A_{OILr}(1+tp^D_{OILgr}+tf^D_{OILgr})}{\bar{P}_{OILgr}} + a^{CO_2}_{OILgr}p^{CO_2}_r\right)^{1-\sigma^{OIL}} \\
&+ \quad (1-\theta_{OILgr})\left(\frac{P^A_{GASr}(1+tp^D_{GASgr}+tf^D_{GASgr})}{\bar{P}_{GASgr}} + a^{CO_2}_{GASgr}p^{CO_2}_r\right)^{1-\sigma^{OIL}}\Bigg)^{\frac{1}{1-\sigma^{OIL}}}\Bigg)^{1-\sigma^{COA}}\Bigg)^{\frac{1}{1-\sigma^{COA}}}\Bigg)^{1-\sigma^{ELE}}\Bigg)^{\frac{1}{1-\sigma^{ELE}}} \\
&\leq 0
\end{aligned}
$$

5. Armington aggregate (A_{ir}):

$$
\Pi^A_{ir} = P^A_{ir} - \left(\left(\Theta^{DM}_{ir}\mu^{1-\sigma^{DM}} + \left(1-\Theta^{DM}_{ir}\right)\left(\sum_s \Theta^{MM}_{isr} P^{Y^{1-\sigma^{MM}_i}}_{is}\right)^{\frac{1}{1-\sigma^{MM}}}\right)^{1-\sigma^{DM}}\right)^{\frac{1}{1-\sigma^{DM}}} \leq 0
$$

6. Labour supply (L_r):

$$
\Pi^L_r = \frac{P^L_r\left(1-tp^L_r-tf^L_r\right)}{\overline{P^L_r}} - P^{LS}_r \leq 0
$$

7. Mobile capital supply (K):

$$
\Pi^K = \left(\sum_r \Theta^K_r\left(\frac{P^K\left(1-tp^K_r-tf^K_r\right)}{\overline{P^K_r}}\right)^{1+\epsilon}\right)^{\frac{1}{1+\epsilon}} - P^{KM} \leq 0
$$

8. Welfare (W_r):

$$
\Pi^W_r = P^W_r - \left(\Theta^{LS}_r P^{LS^{1-\sigma^{LS}_r}}_r + \left(1-\Theta^{LS}_r\right)P^{Y^{1-\sigma^{LS}_r}}_{Cr}\right)^{\frac{1}{1-\sigma^{LS}_r}} \leq 0
$$

Market clearance conditions

9. Labour (P^L_r):

$$
L_r \geq \sum_g Y_{gr}\frac{\partial \Pi^Y_{gr}}{\partial P^L_r}
$$

10. Leisure (P_r^{LS}):

$$\overline{L}_r - L_r \geq W_r \frac{\partial \Pi_r^W}{\partial P^{LS}}$$

11. Mobile capital (P^{KM}):

$$\sum_r \overline{KM}_r \geq K$$

12. Sector-specific capital (P_{gr}^K):

$$\overline{K}_{gr} + K \frac{\partial \Pi^K}{\partial P_{gr}^K} \geq \sum_g Y_{gr} \frac{\partial \Pi_{gr}^Y}{\partial P_{gr}^K}$$

13. Fossil fuel resources ($P_{gr}^R|_{g \in X}$):

$$\overline{R}_{gr} \geq Y_{gr} \frac{\partial \Pi_{gr}^Y}{\partial (P_{gr}^R (1 + tp_{gr}^R + tf_{gr}^R))}$$

14. Energy composite (P_{gr}^E):

$$E_{gr} \geq Y_{gr} \frac{\partial \Pi_{gr}^Y}{\partial P_{gr}^E}$$

15. Material composite (P_{gr}^M):

$$M_{gr} \geq Y_{gr} \frac{\partial \Pi_{gr}^Y}{\partial P_{gr}^M}$$

16. Armington good (P_{ir}^A):

$$A_{ir} \geq \sum_g E_{gr} \frac{\partial \Pi_{gr}^E}{\partial (P_{ir}^A (1 + tp_{igr}^D + tf_{igr}^D) + a_{igr}^{CO_2} p_r^{CO_2})} + \sum_g M_{gr} \frac{\partial \Pi_{gr}^M}{\partial (P_{ir}^A (1 + tp_{igr}^D + tf_{igr}^D))}$$

17. Commodities (P_{ir}^Y):

$$Y_{ir} \frac{\partial \Pi_{ir}^Y}{\partial (p_{ir}^Y (1 - tp_{ir}^Y - tf_{ir}^Y))} \geq A_{ir} \frac{\partial \Pi_{ir}^A}{\partial P_{ir}^Y}$$

18. Private good consumption (P^Y_{Cr}):

$$Y_{Cr} \geq W_r \frac{\partial \Pi^W_r}{\partial P^Y_{Cr}}$$

19. Investment (P^Y_{Ir}):

$$Y_{Ir} \geq \bar{I}_r$$

20. Public Consumption (P^Y_{Gr}):

$$Y_{Gr} \geq \frac{INC^p_r}{P^Y_{Gr}} + \theta^G_r \frac{INC^f}{P^Y_{Gr}}$$

21. Welfare (P^W_r):

$$W_r \geq \frac{INC^{RA}}{P^W_r}$$

22. Carbon emissions (P^{CO}_2):

$$\overline{CO_2} \geq \sum_r \sum_{i \in EG} \sum_g E_{gr} \frac{\partial \Pi^E_{gr}}{\partial (P^A_{ir}(1 + tp^D_{igr} + tf^D_{igr}) + a^{CO_2}_{igr} p^{CO_2}_r)}$$

Income-expenditure balances

23. Income of representative consumer (INC^{RA}_r):

$$\begin{aligned} INC^{RA}_r = {} & P^{LS}_r \overline{L}_r \\ & + \sum_{x \in g} P^R_{gr} \bar{R}_{gr} \\ & + P^{KM} \overline{KM}_r \\ & + \sum_g P^K_{gr} \overline{K}_{gr} \\ & - P^Y_{Ir} \bar{I}_r \\ & + p^{CO_2}_r \theta^{CO_2}_r \overline{CO}_2 \\ & + \mu \overline{BOP}^{RA}_r \\ & - \chi_r \mu \\ & - \varepsilon_r P^Y_{Cr} \end{aligned}$$

24. Income of provincial government (INC_r^p):

$$
\begin{aligned}
INC_r^p = {} & L_r\, P_r^L\, tp_r^L \\
& + \sum_{g \in x} \bar{R}_{gr}\, P_{gr}^R\, tp_{gr}^R \\
& + \sum_g Y_{gr} \frac{\partial \Pi_{gr}^Y}{\partial P_{gr}^K}\, P_{gr}^K\, tp_r^K \\
& + \sum_i \sum_g \Bigg(E_{gr} \frac{\partial \Pi_{gr}^E}{\partial (P_{ir}^A (1 + tp_{igr}^D + tf_{igr}^D) + a_{igr}^{CO_2} p_r^{CO_2})}\, P_{ir}^A\, tp_{igr}^D \\
& \qquad + M_{gr} \frac{\partial \Pi_{gr}^M}{\partial (P_{ir}^A (1 + tp_{igr}^D + tf_{igr}^D))}\, P_{ir}^A\, tp_{igr}^D \Bigg) \\
& + \sum_g Y_{gr} \frac{\partial \Pi_{gr}^Y}{\partial (p_{gr}^Y (1 - tp_{gr}^Y - tf_{gr}^Y))}\, P_{gr}^Y tp_{gr}^Y \\
& + \sum_g Y_{gr} \frac{\partial \Pi_{gr}^Y}{\partial (\mu (1 - tp_{gr}^Y - tf_{gr}^Y))}\, \mu tp_{gr}^Y \\
& + \mu \overline{BOP}_r^p \\
& + \chi_r \mu
\end{aligned}
$$

25. Income of federal government (INC^f):

$$
\begin{aligned}
INC^f = \sum_r \Big(& L_r\, P_r^L\, tf_r^L \\
& + \sum_{g \in x} \bar{R}_{gr}\, P_{gr}^R\, tf_{gr}^R \\
& + \sum_g Y_{gr} \frac{\partial \Pi_{gr}^Y}{\partial P_{gr}^K}\, P_{gr}^K\, tf_r^K \\
& + \sum_i \sum_g \Bigg(E_{gr} \frac{\partial \Pi_{gr}^E}{\partial (P_{ir}^A (1 + tp_{igr}^D + tf_{igr}^D) + a_{igr}^{CO_2} p_r^{CO_2})}\, P_{ir}^A\, tf_{igr}^D \\
& \qquad + M_{gr} \frac{\partial \Pi_{gr}^M}{\partial (P_{ir}^A (1 + tp_{igr}^D + tf_{igr}^D))}\, P_{ir}^A\, tf_{igr}^D \Bigg) \\
& + \sum_g Y_{gr} \frac{\partial \Pi_{gr}^Y}{\partial (p_{gr}^Y (1 - tp_{gr}^Y - tf_{gr}^Y))}\, P_{gr}^Y tf_{gr}^Y \\
& + \sum_g Y_{gr} \frac{\partial \Pi_{gr}^Y}{\partial (\mu (1 - tp_{gr}^Y - tf_{gr}^Y))}\, \mu tf_{gr}^Y \\
& + \mu \overline{BOP}^f \\
& + \varepsilon_r\, P_{cr}^Y \Big)
\end{aligned}
$$

26. Equal-yield for provincial government demand (χ_r):

$$
\frac{INC_r^P}{P_{Gr}^Y} \geq \bar{G}_r^P
$$

27. Equal-yield for federal government demand (ε):

$$
\sum_r \theta_r^G \frac{INC^f}{P_{Gr}^Y} \geq \sum_r \bar{G}_r^f
$$

C.1 Notation

Symbol	Description
i	Goods excluding final demand goods
g	Goods including intermediate goods ($g = i$) and final demand goods, i.e. private consumption ($g = C$), investment ($g = I$) and public consumption ($g = G$)
r (alias s)	Regions
EG	Energy goods: coal, refined oil, gas and electricity
X	Fossil fuels: coal, crude oil and gas

Table 2: Sets

Symbol	Description
Y_{gr}	Production of good g in region r
E_{gr}	Production of energy composite for good g in region r
M_{gr}	Production of material aggregate for good g in region r
A_{ir}	Production of Armington good i in region r
L_r	Labour supply in region r
K	Capital supply
W_r	Production of composite welfare good

Table 3: Activity variables

Symbol	Description
p^Y_{gr}	Price of good g in region r
p^E_{gr}	Price of energy composite for good g in region r
p^M_{gr}	Price of material composite for good g in region r
p^A_{ir}	Price of Armington good i in region r
p^L_r	Price of labour (wage rate) in region r
p^{LS}_r	Price of leisure in region r
P^K_{gr}	Price of capital services (rental rate) in sector g and region r
p^R_{gr}	Rent to fossil fuel resources in fuel production in sector g ($g \in X$)and region r
$p^{CO_2}_r$	CO_2 price in region r
p^{KM}	Price of interregionally mobile capital
p^K_{gr}	Price of sector-sector specific capital
p^W_r	Price of composite welfare (utility) good
μ	Exchange rate

Table 4: Price variables

Symbol	Description
INC^{RA}_r	Income of representative agent in region r
INC^p_r	Income of provincial government in region r
INC^f	Income of federal government

Table 5: Income Variables

Symbol	Description
tp^Y_{gr}	Provincial taxes on output in sector g and region r
tf^Y_{gr}	Federal taxes on output in sector g and region r
tp^R_{gr}	Provincial taxes on resource extraction in sector g and region r
tf^R_{gr}	Federal taxes on resource extraction in sector g and region r
tp^D_{igr}	Provincial taxes on intermediate good i in sector g and region$r$
tf^D_{igr}	Federal taxes on intermediate good i in sector g and region$r$
tp^L_r	Provincial taxes on labour in region r
tf^L_r	Federal taxes on labour in region r
tp^K_r	Provincial taxes on capital in region r
tf^K_r	Federal taxes on capital in region r
$\bar{P}^Y_{gr}$	Reference price of good g in region r
$\bar{\mu}_{gr}$	Reference value of exchange rate
$\bar{P}^R_{gr}$	Reference price of fossil fuel resource g in region r
$\bar{P}^A_{ir}$	Reference price of Armington good i in region r
$\bar{P}^L_r$	Reference price of labour (wage rate) in region r
$\bar{P}^K_r$	Reference price of capital in region r

Table 6: Tax rates and reference prices

Symbol	Description
θ_{gr}^{EX}	Value share of international market exports in domestic production of good g in region r
θ_{gr}^{E}	Value share of energy in the production of good g in region r
θ_{gr}^{M}	Value share of the material aggregate within the composite of value-added and material in the production of good g in region r
θ_{gr}^{L}	Value share of labour in the value-added composite of good g production in region r
θ_{gr}^{R}	Value share of fossil fuel resource in fossil fuel production ($g \in X$) in region r
θ_{gr}^{ELE}	Value share of electricity in the energy composite of good g production in region r
θ_{gr}^{COA}	Value share of coal in the coal-oil-gas composite of good g production in region r
θ_{gr}^{OIL}	Value share of oil in the oil-gas composite of good g production in region r
θ_{ir}^{DM}	Value share of domestically produced inputs to Armington production of good g in region r
θ_{isr}^{MM}	Value share of imports from region s in the import composite of good i to region r
θ_{r}^{K}	Value share of capital supply to region r in overall (mobile) capital supply
θ_{r}^{LS}	Value share of leisure demand in region r
θ_{r}^{G}	Share of region r in overall public good consumption
$\theta_{r}^{CO_2}$	Share of region r in overall CO_2 emission endowment

Table 7: Cost shares

Symbol	Description
$\overline{L}_r$	Aggregate time (labour and leisure) endowment of region r
$\overline{K}_{gr}$	Sector-specific capital endowment of region r
$\overline{R}_{gr}$	Endowment of fossil fuel resource g by region r ($g \in X$)
$\overline{BOP}_r^{RA}$	Representative agent's balance of payment deficit or surplus in region r
$\overline{BOP}_r^{p}$	Provincial government's balance of payment deficit or surplus in region r
$\overline{BOP}^{f}$	Federal government's initial balance of payment deficit or surplus
$\overline{CO}_2$	Endowment with carbon emission rights
$a_{igr}^{CO_2}$	Carbon emissions coefficient for fossil fuel i ($i \in X$)in good g production of region r
$\overline{I}$	Exogenous investment demand
G_r^p	Exogenous provincial government demand
G_r^f	Exogenous federal government demand

Table 8: Endowments and emissions coefficients

Symbol	Description
χ_r	Lump-sum transfers to warrant equal-yield constraint for provincial government r
ε_r	Lump-sum transfers to warrant equal-yield for federal government

Table 9: Additional variables

D Decomposition

We illustrate the decomposition with a stylized version of the multi-region model, introduced in Section 3, in which we omit any details regarding functional forms and make some simplifications for ease of exposition.[20] We summarize the equilibrium conditions in the stylized multi-region model in Table 11 and the associated notation in Table 10. Each production sector produces at constant returns to scale, and earns zero profit in equilibrium. We write a unit profit function for each sector, which is defined as a revenue function less an expenditure function. We suppress details of these functions here. There are three classes of profit functions in our stylized multi-region model: one for production of output (in each sector and region), one for production of the Armington good (for each commodity and region), and one for production of the final demand good (for each region).

Differentiating the profit function by an input or output price generates a compensated demand or supply function for the good associated with the price. These compensated demand functions are used to express the market clearance conditions associated with the equilibrium. There are four classes of market clearance condition in our stylized multi-region model: one for factor markets (for each factor and region), one for output markets (for each commodity and region), one for goods markets (for each commodity and region), and one for the consumption good market (for each region).

Finally, the model is closed by specifying income balance equations for each of the agents in the model and by fixing the balance of international payments at the benchmark level. The income of the representative agent is the sum of returns to (fixed) endowments as well as an exogenous balance of payments. The income of the federal government is due to tax revenues associated with federal taxes, which depend on tax rates and the tax base (for which details are omitted). The income of the provincial government is due to tax revenues associated with provincial taxes, including the tax on carbon emissions; again we omit details of the tax bases. In the stylized model, we include only one type of tax (in addition to the carbon tax) for notational simplicity. In the numerical model, there are a variety of taxes imposed by both levels of government as described in

[20] The results in the paper are produced with the complete version of the model. We use a simplified version here to reduce notational burden.

section 3. When we conduct policy simulations by imposing an exogenous carbon tax, we impose constraints to maintain real expenditures by provincial and federal governments fixed at benchmark levels (i.e., we fix $\frac{Inc_r^{pg}}{p_r^C}$ and $\frac{Inc^{fg}}{p_r^C}$, respectively). We ensure real government expenditure is fixed by endogenously adjusting federal and provincial tax rates in the model (tf_{ir}^Y and tp_{ir}^Y, respectively), or by implementing lump sum transfers, depending on the scenario.

The carbon tax is set and revenue from the carbon tax is disbursed as described in the paper. From the multi-region model, we obtain the full general equilibrium effect of the carbon tax on welfare, which we measure as a percent change in Hicksian Equivalent Variation (HEV) of income from the benchmark. To decompose the total welfare into the three terms described above, we use a single-region variant of our multi-region model.

The single-region variant of our model is described in stylized form in Table 12. It is identical to the multi-region model, with three exceptions. First, it contains only one region, and as a result regional subscripts are dropped in Table 12. Second, it treats prices facing the province ($\bar{p}_{ir}^Y$) as parametric, rather than endogenous (the overbar denotes a parameter). Third, it treats federal government tax rates ($\bar{tf}_{ir}^Y$) as parametric, rather than endogenous. Fourth, it treats the income of the federal government ($\bar{Inc}^{fg}$) from other provinces as parametric, rather than endogenous.

Symbol	Description
N	Number of commodities (sectors)
K	Number of factors
M	Number of regions (provinces)
$i, j = 1, \ldots, N$	Index for commodities (sectors)
$f = 1, \ldots, K$	Index for factors
$r, s = 1, \ldots, M$	Index for regions
v	Revenue function
w	Cost function
Π_{ir}^{z}	Profit function for production ($z = Y$), Armington ($z = A$), or final demand ($z = C$) for good i and region r
$\bar{E}_{fr}$	Endowment of factor f in region r
Y_{ir}	Production level of good i in region r
A_{ir}	Supply of Armington good i in region r
C_r	Supply of final demand good in region r
$\bar{B}_r$	Balance of payments in region r
Inc_r^c	Consumer income
Inc^{fg}	Federal government income
Inc_r^{pg}	Provincial government income in region r
p_{ir}^{Y}	Price of output of good i in region r
p_{fr}^{F}	Price of factor f in region r
p_{ir}^{A}	Price of Armington good i in region r
μ	Price of foreign exchange
tp_{ir}^{Y}	Provincial government tax on sector i and region r
tf_{ir}^{Y}	Federal government tax on sector i and region r
$\bar{t}_r^{CO_2}$	Carbon tax on region r
ω_r	Federal government expenditure share in region r

Table 10: Summary of notation for the stylized models

Summary of MRM equilibrium conditions	
Zero profit	
Production	$\Pi^Y_{ir} = v(p^Y_{i1}, \dots, p^Y_{iM}, \mu) - w(p^F_{1r}, \dots, p^F_{Kr}, p^A_{1r}, \dots, p^A_{Nr}, tp^Y_{ir}, tf^Y_{ir}, \bar{t}^{CO_2}_r)$
Armington good	$\Pi^A_{ir} = p^A_{ir} - w(\mu, p^Y_{i1}, \dots, p^Y_{iM})$
Final demand	$\Pi^C_r = p^C_r - w(p^A_{1r}, \dots, p^A_{Nr}, tp^Y_{ir}, tf^Y_{ir}, \bar{t}^{CO_2}_r)$
Market clearance	
Factor markets	$\bar{E}_{fr} = \sum_{i=1}^N \frac{\partial \Pi^Y_{ir}}{\partial p^F_{fr}}$
Output markets	$Y_{ir} \frac{\partial \Pi^Y_{ir}}{\partial p^Y_{ir}} = \sum_{s=1}^M \sum_{j=1}^N A_{js} \frac{\partial \Pi^A_{js}}{\partial p^Y_{ir}}$
Goods markets	$A_{ir} = \sum_{j=1}^N Y_{jr} \frac{\partial \Pi^Y_{jr}}{\partial p^A_{ir}} + C_r \frac{\partial \Pi^C_r}{\partial p^A_{ir}}$
Consumption good market	$p^C_r C_r = Inc^c_r + \omega_r Inc^{fg} + Inc^{pg}_r$
Balance of payments	$\sum_{i=1}^N \sum_{r=1}^M Y_{ir} \frac{\partial \Pi^Y_{ir}}{\partial \mu} = \sum_{i=1}^N \sum_{r=1}^M A_{ir} \frac{\partial \Pi^A_{ir}}{\partial \mu} - \sum_{r=1}^M \bar{B}_r \mu$
Income balance	
Consumer	$Inc^c_r = \bar{B}_r + \sum_{f=1}^K \bar{E}_{fr} p^F_{fr}$
Federal government	$Inc^{fg} = v(tf^Y_{ir}, \dots)$
Provincial government	$Inc^{pg}_r = v(tp^Y_{ir}, \bar{t}^{CO_2}_r, \dots)$

Table 11: Algebraic summary of the stylized multi-region (MRM) model

Summary of SRM equilibrium conditions	
Zero profit	
Production	$\Pi_i^Y = v(\bar{p}_{i1}^Y, \dots, p_i^Y, \dots, \bar{p}_{iM}^Y, \bar{\mu}) - w(p_1^F, \dots, p_K^F, p_1^A, \dots, p_N^A, \bar{tp}_i^Y, \bar{tf}_i^Y, \bar{t}^{CO_2})$
Armington good	$\Pi_i^A = p_i^A - w(\bar{\mu}, \bar{p}_{i1}^Y, \dots, p_i^Y, \dots, \bar{p}_{iM}^Y)$
Final demand	$\Pi^C = p^C - w(p_1^A, \dots, p_N^A, tp_i^Y, \bar{tf}_i^Y, \bar{t}^{CO_2})$
Market clearance	
Factor markets	$\bar{E}_f = \sum_{i=1}^N \frac{\partial \Pi_i^Y}{\partial p_f^F}$
Output markets	$Y_i \frac{\partial \Pi_i^Y}{\partial p_i^Y} = \sum_{s=1}^M \sum_{j=1}^N A_{js} \frac{\partial \Pi_{js}^A}{\partial p_{ir}^Y}$
Goods markets	$A_{ir} = \sum_{j=1}^N Y_{jr} \frac{\partial \Pi_{jr}^Y}{\partial p_{ir}^A} + C_r \frac{\partial \Pi_r^C}{\partial p_{ir}^A}$
Consumption good market	$p_r^C C_r = Inc_r^c + \omega_r \bar{Inc}^{fg} + Inc_r^{pg}$
Balance of payments	$\sum_{i=1}^N Y_i \frac{\partial \Pi_i^Y}{\partial \bar{\mu}} \bar{\mu} + \sum_{i=1}^N \sum_{r=1}^M Y_i \frac{\partial \Pi_i^Y}{\partial \bar{p}_{ir}^Y} \bar{p}_{ir}^Y =$
	$\sum_{i=1}^N A_{ir} \frac{\partial \Pi_{ir}^A}{\partial \bar{\mu}} \bar{\mu} + \sum_{i=1}^N \sum_{r=1}^M A_{ir} \frac{\partial \bar{P}ii_{ir}^A}{\partial \bar{p}_{ir}^Y} \bar{p}_{ir}^Y - \bar{B}\bar{\mu}$
Income balance	
Consumer	$Inc^c = \bar{B} + \sum_{f=1}^K \bar{E}_{fr} p_{fr}^F$
Federal government	$\bar{Inc}^{fg} = v(\bar{tf}_{ir}^Y, \dots)$
Provincial government	$Inc^{pg} = v(tp_{ir}^Y, \bar{t}_r^{CO_2}, \dots)$

Table 12: Algebraic summary of the stylized single-region (SRM) model

E Partial equilibrium numerical simulation code (written in R language; electronic appendix)

```
# Supply slope: a
a <- 0.75
# Demand slope: b; intercept: c
b <- -0.5
c <- 10
# Ad valorem federal tax
tf <- 0.25
# State excise tax
ts <- 3

# Prices
minp <- 0
maxp <- 10
p <- seq(minp,maxp,by=0.1)

sup <- a * p
dem <- c + b * p

welfare <- function (ts) {

# Calculate intersections
xy1 <- solve(matrix( c(1,-a,1,-b),nrow=2,ncol=2,byrow=TRUE))
%*% matrix( c(0,c), nrow=2, ncol=1, byrow=TRUE)
xy2 <- solve(matrix( c(1+tf,-a,1,-b),nrow=2,ncol=2,byrow=TRUE))
%*% matrix( c(0,c), nrow=2, ncol=1, byrow=TRUE)
xy3 <- solve(matrix( c(1+tf,-a,1,-b),nrow=2,ncol=2,byrow=TRUE))
%*% matrix( c(-ts*a,c), nrow=2, ncol=1, byrow=TRUE)
y4 <- xy2[1,1] / a
y5 <- xy3[1,1] / a

# Deadweight loss federal tax only
DWL_f <- 0.5 * (xy2[2,1] - y4) * (xy1[1,1] - xy2[1,1])
# Deadweight loss federal plus state
DWL_fs <- 0.5 * (xy3[2,1] - y5) * (xy1[1,1] - xy3[1,1])
# Federal tax (no state tax)
REV_f <- xy2[1,1] * (xy2[2,1]-y4)
# Federal tax (with state tax)
REV_fs <- xy3[1,1] * (xy3[2,1]-y5-ts)

# Net cost of state tax
```

```
DWL_f
DWL_fs
REV_f
REV_fs
cost <- (DWL_fs - DWL_f) - (REV_f - REV_fs)
FX <- (REV_f - REV_fs)
CP <- (DWL_fs - DWL_f)
out <- c(cost,FX,CP)
return(out)
}


i <- seq(0.1,5,by=0.1)
netcost <- numeric(length(i))
cp <- numeric(length(i))
fx <- numeric(length(i))
j <- 1
for (ts in i) {
  netcost[j] <- welfare(ts)[1]
  fx[j] <- welfare(ts)[2]
  cp[j] <- welfare(ts)[3]
  j <- j + 1
}

plot(i,-netcost,xlab="State excise tax ($/unit)",
     ylab="Welfare",
     type="l",ylim=c(min(fx,cp,netcost),
     max(fx,cp,netcost)),lwd=3,axes=FALSE)
axis(1,labels=FALSE)
axis(2,labels=FALSE)
lines(i,fx,col="green",lwd=3,lty=2)
lines(i,cp,col="orange",lwd=3,lty=3)
abline(h=0)
legend("topleft",col=c("orange","green","black"),
lwd=3,lty=c(3,2,1),bty="n",
c("Carbon policy effect (-)","Fiscal externality effect (+)","Total welfare"))
```